Case Style VU

VU3577

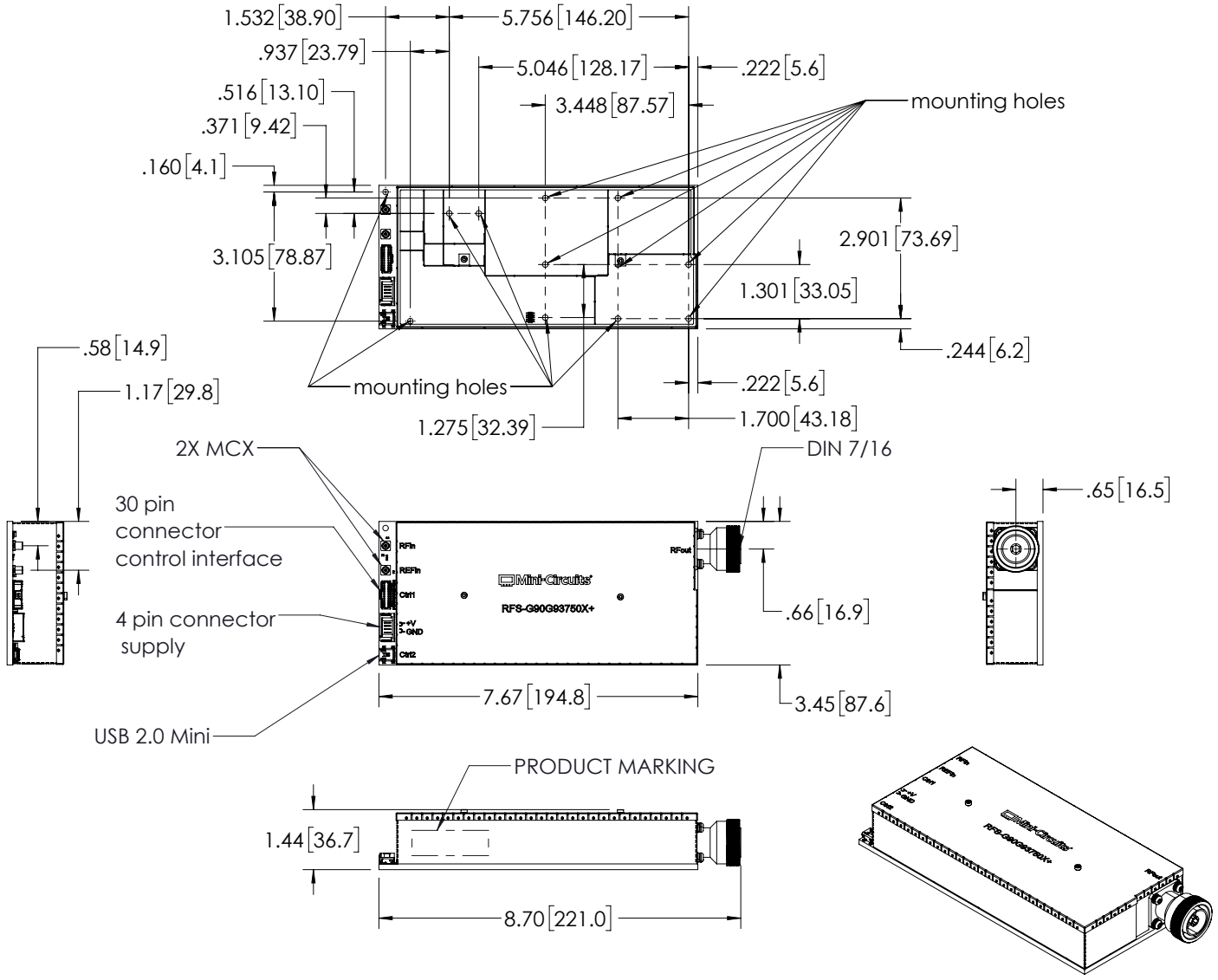

Dimensions are in inches [mm]. Tolerances: 2 Pl. ±0.03 inch; 3 Pl. ±0.015 inch

Notes:

1. Case Material/Finish: Nickel silver Shield and Cover. ENIG finish on bottom of PCB
2. Shield cover requires temporary removal to install mounting screws
3. M3 SHCS(DIN 912, ISO 21269) screws recomended for mounting.
4. 1.5NM (13lbf) Max. torque recommended for mounting screws.
5. Weight: 200 grams

This document and its contents are the property of Mini-Circuits