Case Style UW

Outline Dimensions UW3675

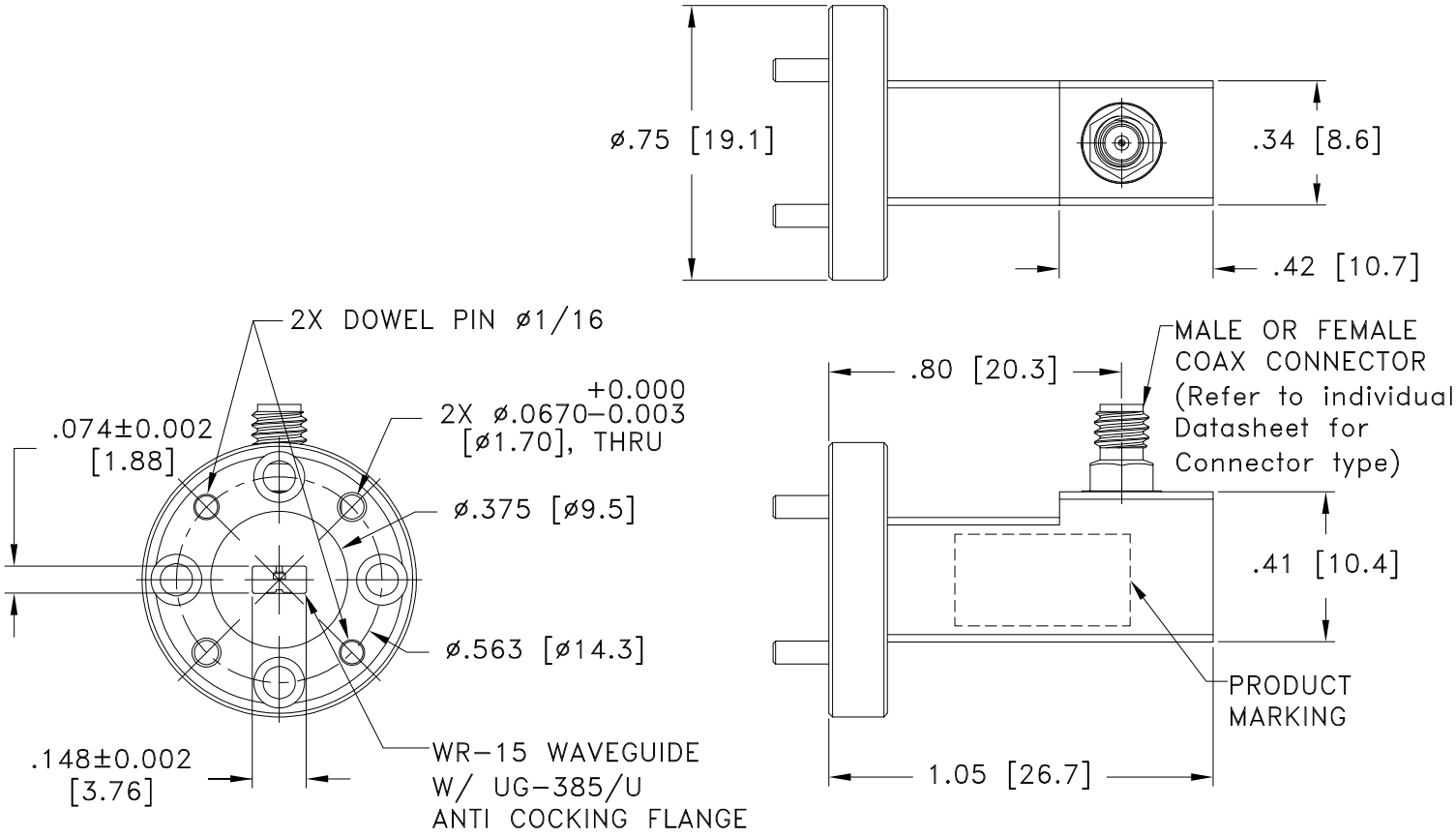

Weight: 11 grams

Dimensions are in inches [mm]. Tolerances: 2 Pl.±.03; 3 Pl. ±.015 Inches

Notes:

1. Case material: Aluminum alloy.
2. Case Finish: Gold plated.

This document and its contents are the property of Mini-Circuits