CAVITY COAXIAL

Bandpass Filter

ZVBP-1300-S+

50Ω 1300 MHz SMA Female

KEY FEATURES

- Low Insertion Loss, 1 dB Typ.
- Good Return Loss, 18 dB Typ.
- High Rejection, 90 dB Typ.
- Stopband up to 4000 MHz
- Power Handling: 10 Watts

Generic photo used for illustration purposes only

APPLICATIONS

- Aerospace
- Defense & Government
- Military Radio
- GPS

FUNCTIONAL DIAGRAM

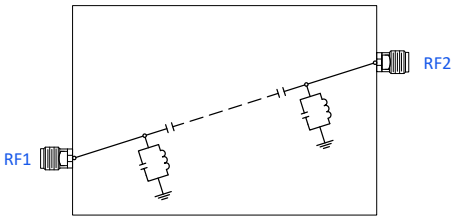

PRODUCT OVERVIEW

Mini-Circuits' ZVBP-1300-S+ is a coaxial cavity filter designed by implementing resonant structures with very high Q and are ideal for narrow-band, high-selectivity applications.Mini-Circuits' coaxial cavity filters feature a special protective assembly to prevent accidental de-tuning that would otherwise require expensive replacement or return to factory for re-tuning. Precise machining allows realization of cavity filters with small form factors for applications where size is critical.

ELECTRICAL SPECIFICATIONS AT +25°C

Parameter		F#	Frequency (MHz)	Min.	Typ.	Max.	Units
Passband	Center Frequency	Fc	—	—	1300	—	MHz
	1 dB Bandwidth	—	—	20	—	—	MHz
	Insertion Loss	Fc	1300	—	1.0	1.2	dB
	Return Loss	Fc	1300	14	18	—	dB
Stopband, Lower	Rejection	DC-F1	DC - 1000	80	90	—	dB
		F1-F2	1000 - 1260	50	54	—	
Stopband, Upper	Rejection	F3-F4	1340 - 1500	50	56	—	dB
		F4-F5	1500 - 4000	80	90	—	

ABSOLUTE MAXIMUM RATINGS[1,2]

Parameter	Ratings
Operating Temperature	-40°C to +85°C
Storage Temperature	-55°C to +100°C
Input Power[3]	10 W max. at +25°C

1. Permanent damage may occur if any of these limits are exceeded.
2. Input and output ports are DC short to ground.
3. Power rating applies only to signals within the passband.

TYPICAL FREQUENCY RESPONSE AT +25°C

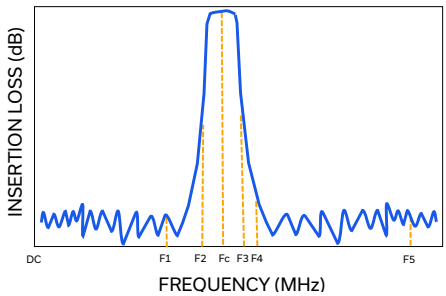

REV. A
ECO-030582
ZVBP-1300-S+
EDU5445
MCINU
260727

TYPICAL PERFORMANCE GRAPHS

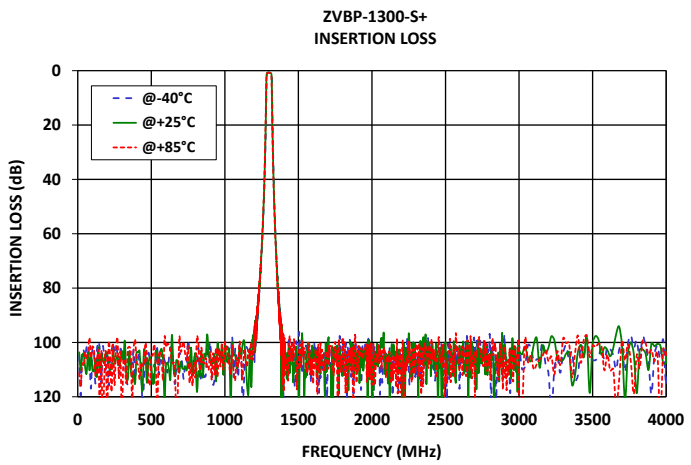

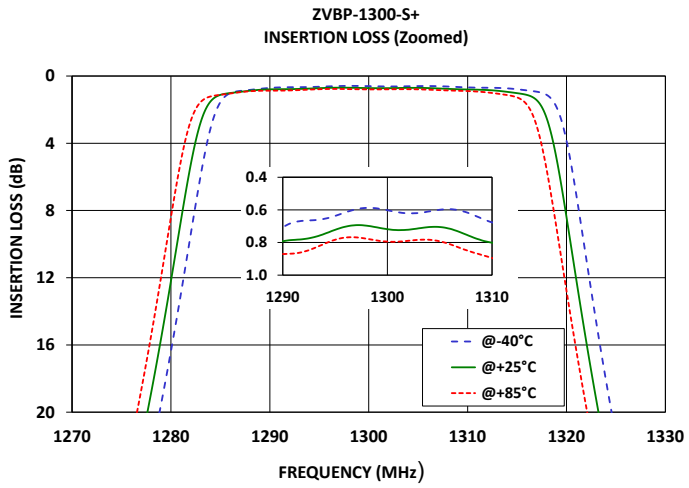

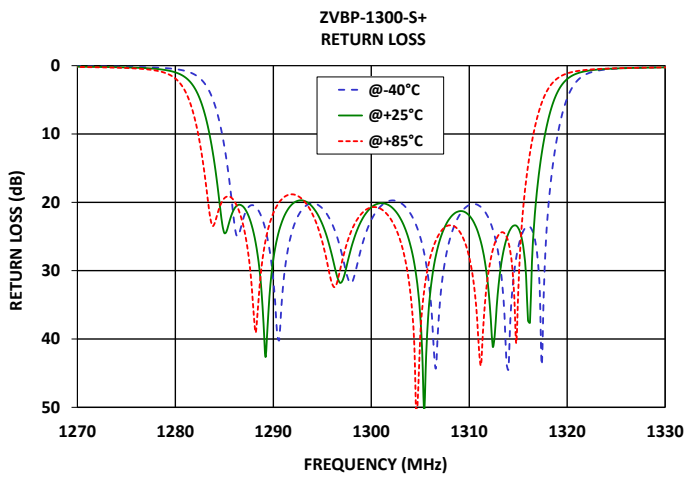

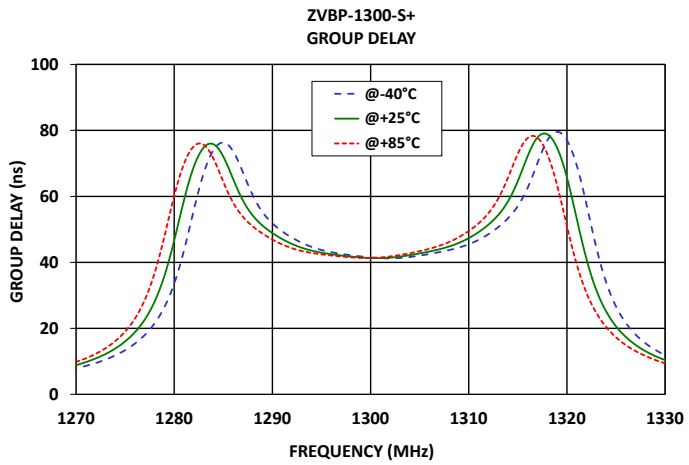

CONNECTOR DESCRIPTION

Function	Connector
RF1[4]	SMA Female
RF2[4]	SMA Female

4. This filter is bi-directional RF1 and RF2 ports may be interchanged, see S-Parameters for actual performance.

CASE STYLE DRAWING

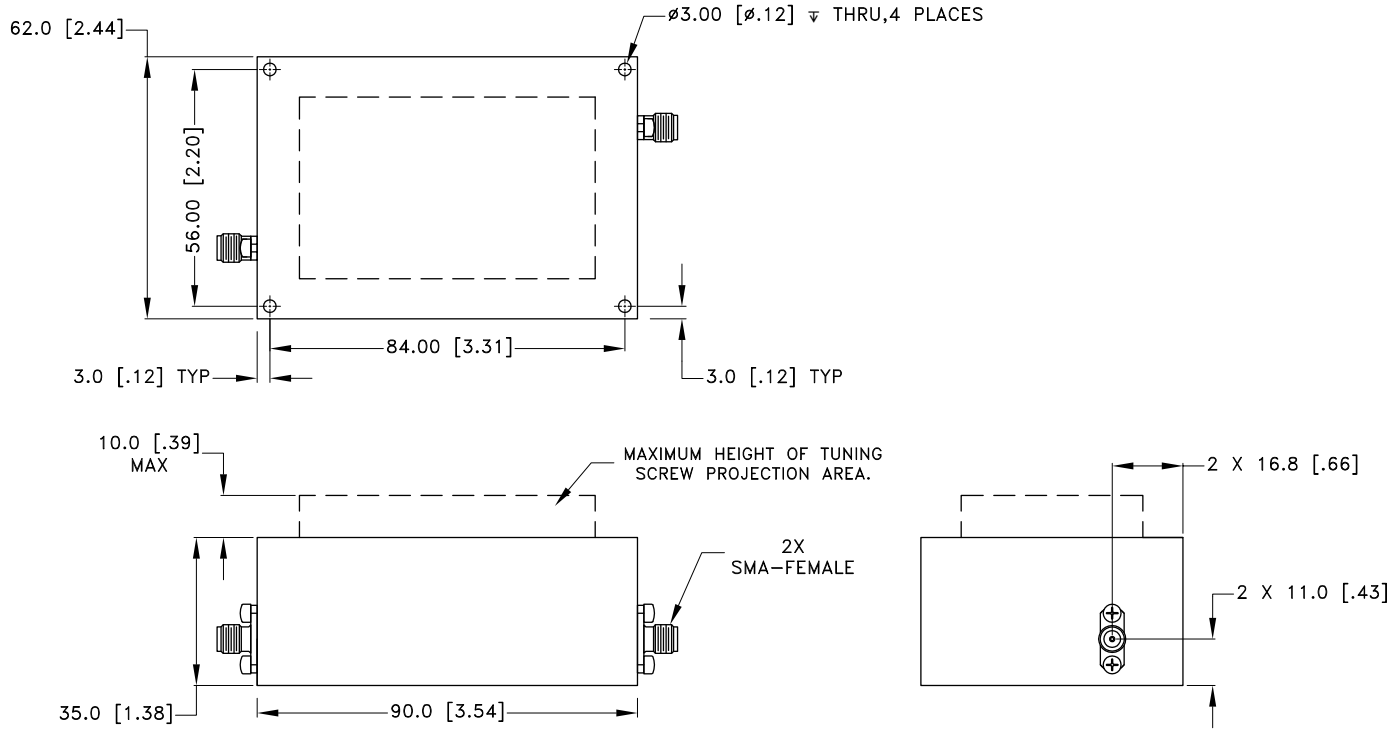

Unit Weight: 325 Grams.
Dimensions are in mm (inches). Tolerances: 1 Pl. ± 1.5[0.06]; 2 Pl. ± 0.4[0.016]

PRODUCT MARKING*: ZVBP-1300-S+

*Marking may contain other features or characters for internal lot control.

ADDITIONAL INFORMATION IS AVAILABLE ON OUR DASHBOARD CLICK HERE

Performance Data & Graphs	Data Graphs S-Parameter (S2P Files) Data Set (.zip file)
Case Style	BCC3818
RoHS Status	Compliant
Environmental Ratings	ENV46

NOTES

A. Performance and quality attributes and conditions not expressly stated in this specification document are intended to be excluded and do not form a part of this specification document.

B. Electrical specifications and performance data contained in this specification document are based on Mini-Circuits' applicable established test performance criteria and measurement instructions.

C. The parts covered by this specification document are subject to Mini-Circuits' standard limited warranty and terms and conditions (collectively, "Standard Terms"); Purchasers of this part are entitled to the rights and benefits contained therein. For a full statement of the standard terms and the exclusive rights and remedies thereunder, please visit Mini-Circuits' website at www.minicircuits.com/terms/viewterm.html

Cavity Band Pass Filter ZVBP-1300-S+

Typical Performance Data

FREQ.	INSERTION LOSS			INPUT RETURN LOSS			OUTPUT RETURN LOSS		
(MHz)	(dB)			(dB)			(dB)		
	@-40°C	@+25°C	@+85°C	@-40°C	@+25°C	@+85°C	@-40°C	@+25°C	@+85°C
10	104.78	103.63	111.23	0.01	0.01	0.01	0.01	0.01	0.02
20	119.57	110.20	116.15	0.01	0.01	0.01	0.01	0.01	0.02
50	105.55	109.12	103.54	0.01	0.02	0.02	0.01	0.02	0.03
100	101.86	110.34	101.50	0.02	0.04	0.04	0.02	0.04	0.04
150	102.44	110.59	126.33	0.03	0.05	0.05	0.04	0.05	0.05
200	103.57	103.66	127.34	0.04	0.06	0.06	0.04	0.06	0.06
250	103.14	107.63	115.73	0.04	0.06	0.06	0.05	0.06	0.06
300	104.70	103.09	129.24	0.05	0.07	0.07	0.05	0.07	0.07
350	103.42	103.46	101.57	0.05	0.07	0.07	0.05	0.07	0.07
400	106.73	103.59	107.18	0.05	0.07	0.07	0.05	0.07	0.08
450	114.83	102.66	108.51	0.06	0.08	0.08	0.06	0.08	0.08
500	111.14	108.08	105.02	0.05	0.07	0.08	0.05	0.08	0.08
550	111.79	107.79	105.11	0.05	0.07	0.08	0.05	0.08	0.08
600	108.52	108.17	101.74	0.05	0.08	0.08	0.05	0.08	0.09
650	108.04	108.22	107.42	0.05	0.07	0.08	0.05	0.08	0.08
700	104.58	107.11	103.45	0.05	0.07	0.08	0.05	0.07	0.08
750	99.22	107.14	101.47	0.05	0.08	0.08	0.05	0.08	0.09
800	110.61	104.29	112.73	0.05	0.07	0.08	0.05	0.07	0.08
850	108.18	112.99	107.24	0.05	0.07	0.08	0.04	0.07	0.08
900	99.77	106.77	103.35	0.04	0.07	0.08	0.04	0.07	0.08
950	104.48	100.29	112.71	0.04	0.06	0.07	0.03	0.06	0.08
1000	104.84	100.87	100.02	0.04	0.07	0.08	0.03	0.07	0.08
1100	100.54	101.71	99.68	0.02	0.05	0.07	0.02	0.05	0.07
1260	55.84	54.23	52.81	0.04	0.09	0.12	0.04	0.08	0.12
1270	40.51	38.23	36.17	0.09	0.15	0.20	0.08	0.15	0.20
1273	34.62	31.97	29.57	0.12	0.20	0.26	0.12	0.20	0.27
1277	25.21	21.83	18.67	0.22	0.37	0.52	0.23	0.37	0.54
1280	16.37	12.19	8.39	0.50	0.98	1.88	0.52	1.01	1.96
1283	5.94	2.76	1.55	2.63	7.05	16.02	2.72	7.34	17.83
1290	0.71	0.79	0.87	31.38	28.36	21.58	28.68	27.26	21.60
1295	0.64	0.72	0.78	20.86	23.18	25.78	21.12	23.77	26.98
1297	0.60	0.69	0.77	27.57	31.62	28.75	29.46	45.56	30.77
1300	0.60	0.72	0.79	22.59	20.74	20.73	23.12	21.02	20.81
1301	0.61	0.72	0.80	20.52	20.12	20.98	20.79	20.28	20.99
1302	0.62	0.72	0.79	19.74	20.62	22.48	19.90	20.68	22.37
1305	0.60	0.71	0.79	25.10	36.61	39.49	24.57	31.39	34.01
1310	0.68	0.80	0.89	20.39	21.93	28.04	20.33	22.10	28.52
1318	1.12	2.52	5.59	22.00	8.28	3.54	20.56	8.10	3.46
1321	7.10	12.16	16.36	2.24	1.14	0.79	2.19	1.10	0.76
1324	18.14	22.42	25.77	0.55	0.48	0.43	0.52	0.45	0.41
1327	27.30	30.79	33.54	0.31	0.32	0.32	0.29	0.30	0.30
1340	53.68	55.71	57.38	0.12	0.16	0.17	0.11	0.15	0.17
1350	67.09	68.91	70.24	0.08	0.12	0.14	0.08	0.11	0.14
1370	87.07	85.74	88.04	0.06	0.09	0.11	0.05	0.09	0.11
1500	103.32	110.68	109.94	0.02	0.06	0.08	0.01	0.06	0.08
1600	101.64	105.59	115.28	0.02	0.06	0.09	0.01	0.06	0.09
2000	104.11	123.72	115.71	0.01	0.06	0.10	0.00	0.06	0.10
2100	107.34	104.47	106.15	0.00	0.05	0.09	0.01	0.05	0.10
2200	104.84	109.52	118.28	0.01	0.05	0.09	0.01	0.05	0.10
2300	105.58	108.32	101.18	0.01	0.06	0.09	0.01	0.06	0.10
2400	107.29	112.44	103.86	0.00	0.06	0.10	0.01	0.06	0.11
2500	114.96	99.90	106.73	0.00	0.06	0.11	0.00	0.06	0.12
2600	109.98	105.75	107.92	0.00	0.06	0.12	0.00	0.07	0.12
2700	114.48	110.97	120.09	0.00	0.07	0.12	0.00	0.07	0.13
3000	100.75	102.67	121.09	0.01	0.08	0.14	0.01	0.08	0.14
3100	107.02	100.78	109.94	0.01	0.08	0.14	0.02	0.09	0.15
3200	111.34	101.86	106.92	0.00	0.08	0.13	0.01	0.08	0.14
3500	106.45	100.29	101.11	0.02	0.09	0.15	0.02	0.10	0.16
3700	101.34	101.30	99.37	0.02	0.09	0.14	0.02	0.09	0.14
4000	115.67	107.46	105.37	0.01	0.08	0.13	0.02	0.09	0.14

Typical Performance Data

FREQ.	GROUP DELAY		
	(nsec)		
(MHz)	@-40°C	@+25°C	@+85°C
1290.0	51.80	48.87	46.91
1290.6	50.27	47.73	45.98
1291.0	49.38	47.05	45.43
1291.6	48.19	46.12	44.70
1292.0	47.47	45.57	44.28
1292.4	46.81	45.07	43.91
1293.0	45.92	44.41	43.44
1293.2	45.64	44.22	43.31
1294.0	44.68	43.56	42.85
1294.6	44.09	43.16	42.59
1295.0	43.76	42.94	42.43
1295.8	43.20	42.56	42.15
1296.0	43.08	42.48	42.08
1296.4	42.87	42.31	41.96
1297.0	42.58	42.09	41.78
1297.6	42.32	41.88	41.62
1298.0	42.16	41.75	41.53
1298.8	41.86	41.52	41.39
1299.0	41.79	41.47	41.37
1299.4	41.66	41.39	41.34
1300.0	41.48	41.30	41.35
1300.4	41.39	41.28	41.38
1301.0	41.28	41.28	41.49
1301.6	41.23	41.36	41.65
1302.0	41.22	41.44	41.80
1302.2	41.23	41.49	41.87
1303.0	41.34	41.75	42.23
1303.8	41.56	42.09	42.66
1304.0	41.63	42.18	42.77
1304.6	41.87	42.49	43.13
1305.0	42.05	42.70	43.39
1305.4	42.24	42.93	43.66
1306.0	42.54	43.29	44.12
1306.2	42.65	43.41	44.28
1307.0	43.09	43.96	45.02
1307.8	43.58	44.62	45.92
1308.0	43.72	44.81	46.17
1308.2	43.85	45.01	46.44
1309.0	44.48	45.92	47.65
1309.6	45.05	46.73	48.71
1310.0	45.49	47.35	49.50

Typical Performance Curves

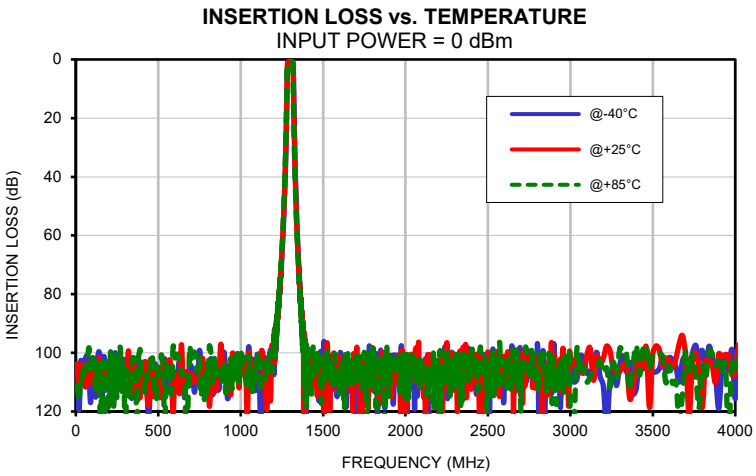

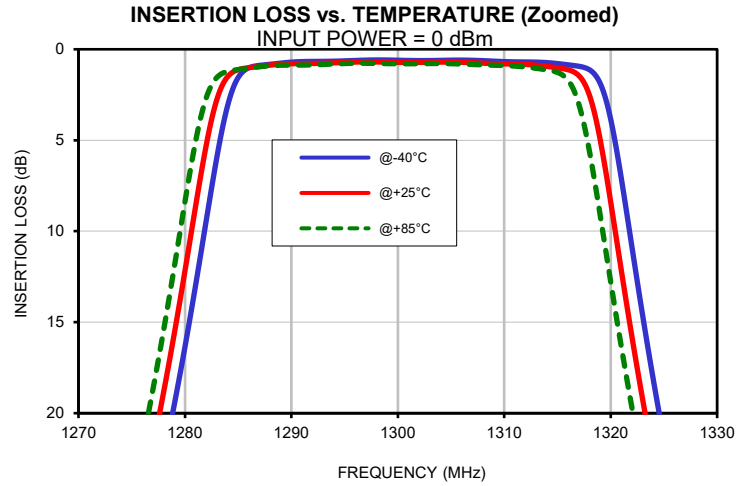

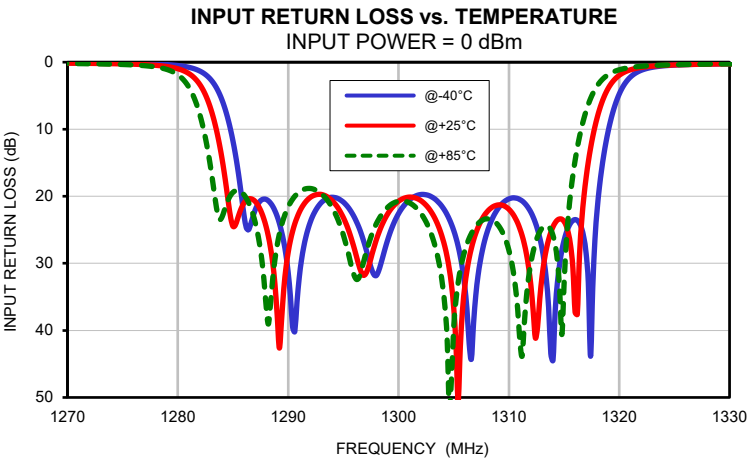

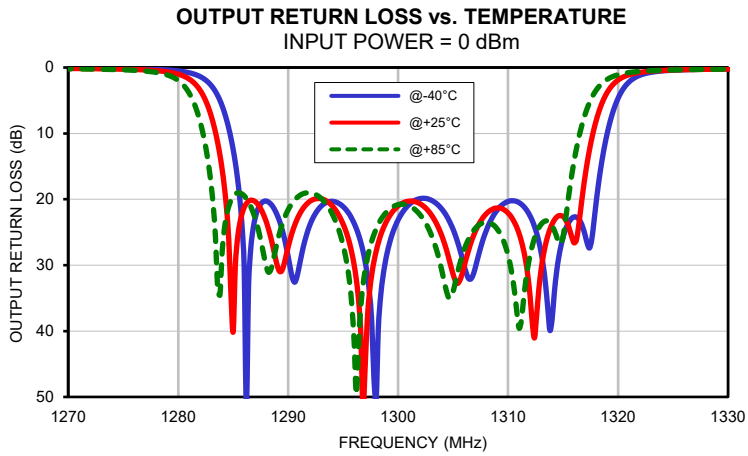

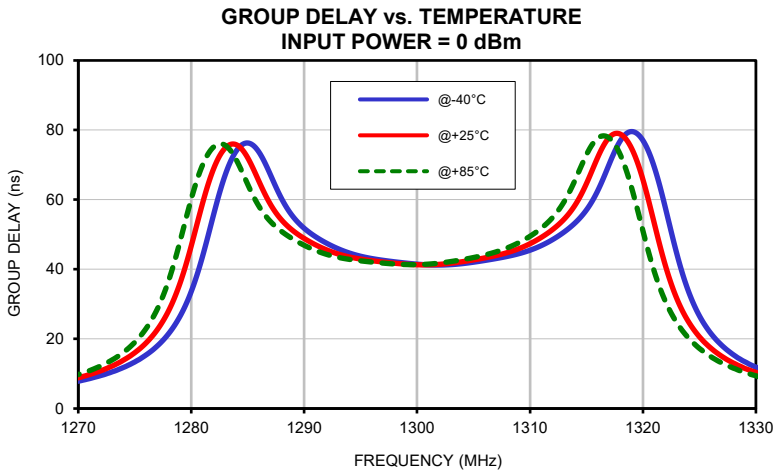

Case Style BCC

Outline Dimensions

BCC3818

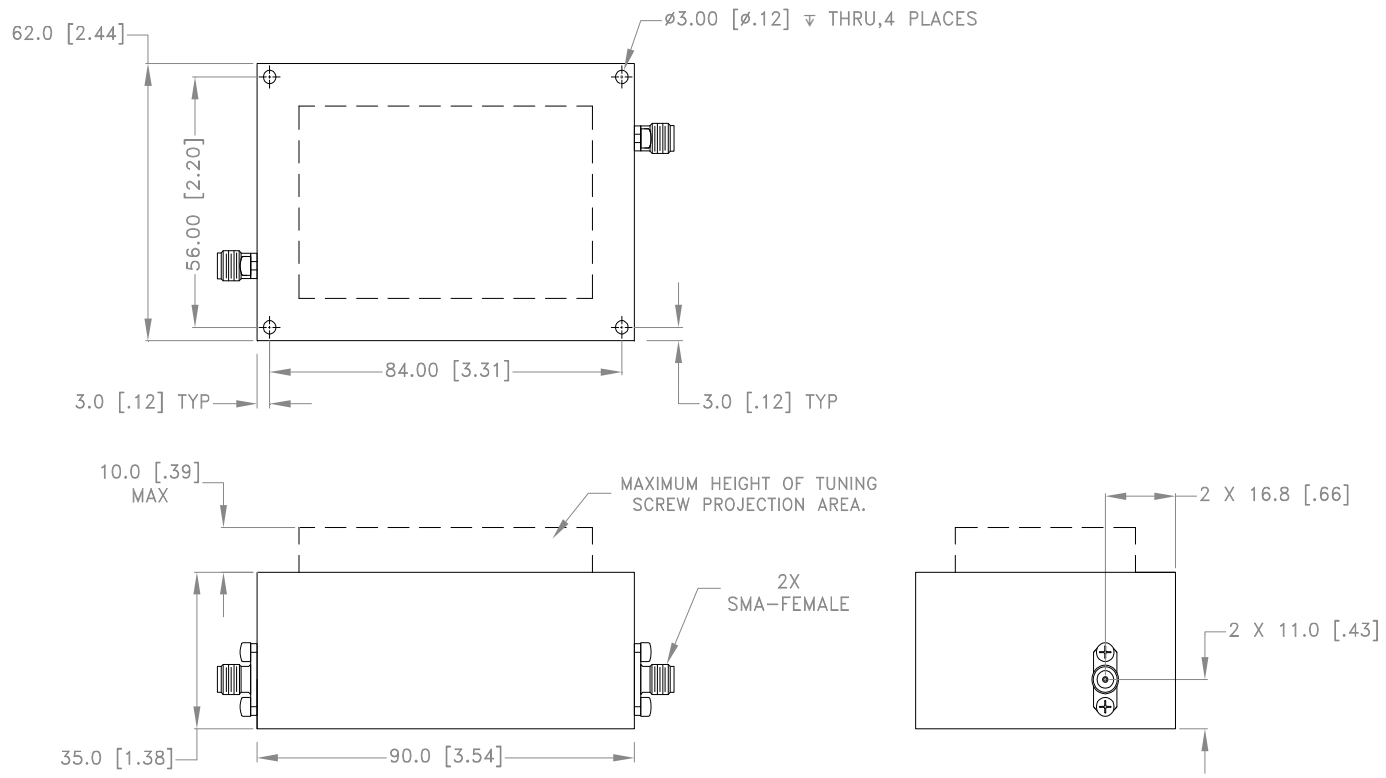

Dimensions are in mm [inches]. Tolerances: 1 Pl. ± 1.5 [0.06]; 2 Pl. ± 0.4 [0.016]

Notes:

1. Case material: Aluminum.
2. Case Finish: Powder coated.
3. Unit Weight: 325 grams.
4. Refer to the individual model data sheet for the type of connectors available.

This document and its contents are the property of Mini-Circuits

Mini-Circuits

Environmental Specifications ENV46

All Mini-Circuits products are manufactured under exacting quality assurance and control standards, and are capable of meeting published specifications after being subjected to any or all of the following physical and environmental test.

Specification	Test/Inspection Condition	Reference/Spec
Operating Temperature	-55° to 100°C Ambient Environment	Individual Model Data Sheet
Storage Temperature	-55° to 100° C Ambient Environment	Individual Model Data Sheet
Humidity	90 to 95% RH, 40°C, 96 hours; Units may require bake-out after humidity to restore full performance.	MIL-STD-202, Method 103, Condintion B
Thermal Shock	-55° to 100°C, 100 cycles	MIL-STD-202, Method 107, Condition A-3, except +100°C
Vibration (High Frequency)	20g peak, 10-2000 Hz, 12 times in each of three perpendicular directions (total 36)	MIL-STD-202, Method 204, Condition D
Mechanical Shock	50g, 11ms half-sine, 3 shocks each direction 3 axes (total 18)	MIL-STD-202, Method 213, Condition A

This document and its contents are the property of Mini-Circuits.