THIN FILM COAXIAL

Bandpass Filter

ZABF-K15R75G+

50Ω 14.2 to 17.4 GHz 2.92mm Female

KEY FEATURES

- Low Passband Insertion Loss 2 dB Typ.
- High Rejection 50 dB Typ.
- Small Size

APPLICATIONS

- Radar
- Point to Point Microwave Links
- Satcom
- Ku Band

Generic photo used for illustration purposes only

PRODUCT OVERVIEW

Mini-Circuits' Connectorized Thin-Film filters offer low insertion loss and high rejection realized via Thin-Film on Alumina substrate, using a sputtering process that can guarantee an enhanced Q and repeatable performance. Low pass, high pass, and bandpass connectorized thin-film designs can be realized with this technology up to 40 GHz in a small form factor helping customers achieve their SWaP objectives. Using our high quality thin-film manufacturing process we can guarantee repeatability on large batches of filters.

FUNCTIONAL DIAGRAM

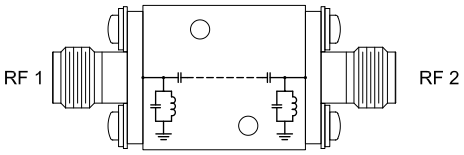

ELECTRICAL SPECIFICATIONS[1] AT +25°C

Parameter		F#	Frequency (GHz)	Min.	Typ.	Max.	Units
Passband	Center Frequency[2]	—	—	—	15.8	—	GHz
	Insertion Loss	F1-F2	14.2 - 17.4	—	2	3	dB
	Return Loss	F1-F2	14.2 - 17.4	—	10	—	dB
Stopband, Lower	Rejection	DC-F3	DC - 7	40	50	—	dB
		F3-F4	7 - 11.2	20	30	—	
Stopband, Upper	Rejection	F5-F6	20.5 - 35	—	10	—	dB

1. This component should not be used as a DC-block. In applications where DC voltage and/or current is present at either the input or output ports, external DC blocking capacitors are required.
2. Typical variation ± 3%

ABSOLUTE MAXIMUM RATINGS[3]

Parameter	Ratings
Operating Temperature	-55°C to +125°C
Storage Temperature	-55°C to +125°C
Input Power[4]	1 W at 25 °C

3. Permanent damage may occur if any of these limits are exceeded.
4. Power rating applies only to signals with in the passband.

TYPICAL FREQUENCY RESPONSE AT+25°C

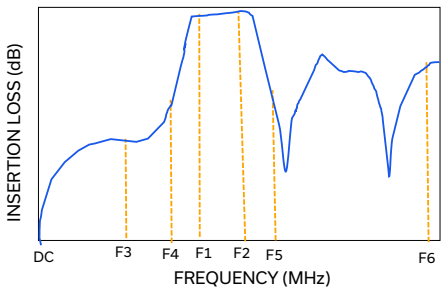

REV. OR
ECO-030150
ZABF-K15R75G+
EDU5149
MCINU
260625

TYPICAL PERFORMANCE GRAPHS AT+25°C

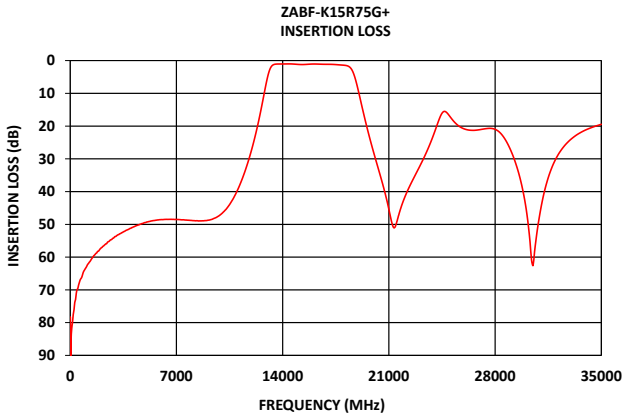

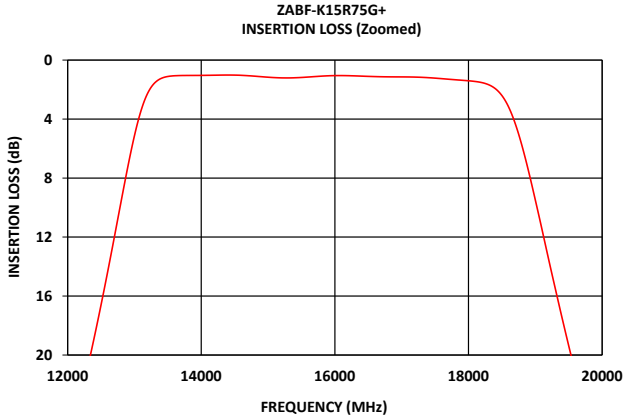

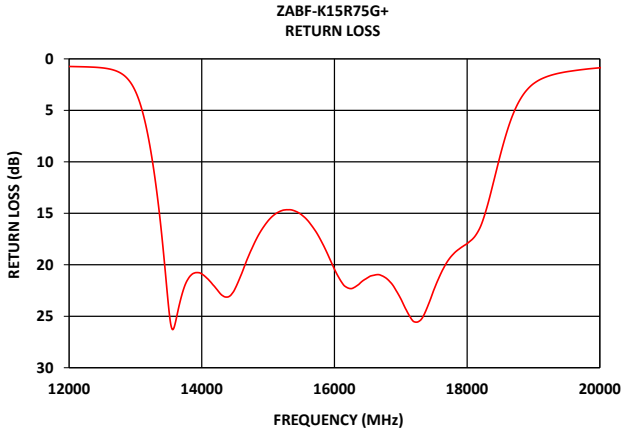

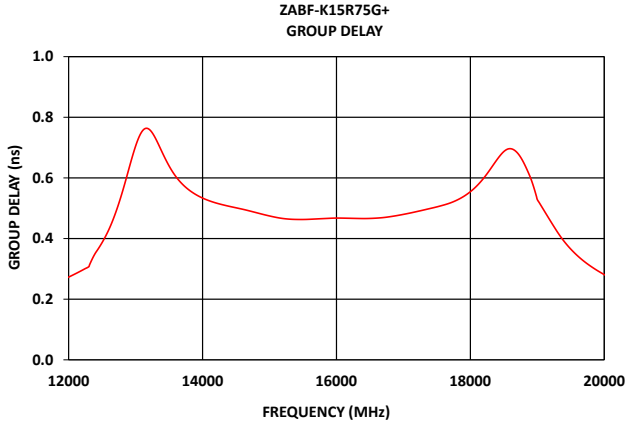

CONNECTOR DESCRIPTION

Function	Connector
RF1[5]	2.92mm Female
RF2[5]	2.92mm Female

5. This filter is bi-directional RF1 and RF2 ports may be interchanged, see S-Parameters for actual performance.

CASE STYLE DRAWING

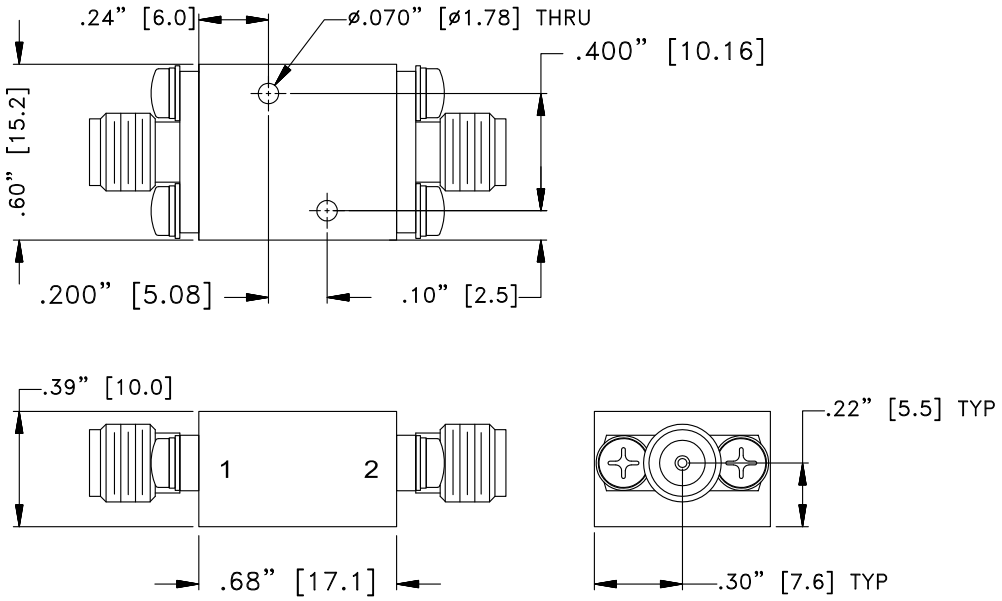

Unit weight: 24grams
Dimensions are in inches (mm). Tolerances: 2 Pl.±.050"; 3 Pl.±.015"

PRODUCT MARKING*: ZABF-K15R75G+

*Marking may contain other features or characters for internal lot control.

ADDITIONAL INFORMATION IS AVAILABLE ON OUR DASHBOARD CLICK HERE

Performance Data & Graphs	Data Graphs S-Parameter (S2P Files) Data Set (.zip file)
Case Style	UK3042
RoHS Status	Compliant
Environmental Ratings	ENV144

NOTES

A. Performance and quality attributes and conditions not expressly stated in this specification document are intended to be excluded and do not form a part of this specification document.

B. Electrical specifications and performance data contained in this specification document are based on Mini-Circuits' applicable established test performance criteria and measurement instructions.

C. The parts covered by this specification document are subject to Mini-Circuits' standard limited warranty and terms and conditions (collectively, "Standard Terms"); Purchasers of this part are entitled to the rights and benefits contained therein. For a full statement of the standard terms and the exclusive rights and remedies thereunder, please visit Mini-Circuits' website at www.minicircuits.com/terms/viewterm.html

Coaxial Thin-Film Bandpass Filter ZABF-K15R75G+

Typical Performance Data

FREQ. (MHz)	Insertion Loss (dB)	Input Return Loss (dB)	Output Return Loss (dB)
10	78.28	0.05	0.09
100	81.76	0.16	0.21
200	77.49	0.20	0.28
300	73.80	0.24	0.33
500	69.59	0.30	0.39
700	66.59	0.36	0.44
1000	63.47	0.44	0.48
1500	59.96	0.48	0.50
2000	57.38	0.40	0.47
2500	55.32	0.29	0.41
3000	53.71	0.22	0.35
3500	52.27	0.22	0.29
4000	51.18	0.23	0.24
4500	50.16	0.17	0.20
5000	49.38	0.09	0.17
6000	48.55	0.15	0.24
7000	48.51	0.36	0.41
7500	48.62	0.41	0.47
8000	48.81	0.43	0.52
8500	48.93	0.46	0.56
9000	48.83	0.49	0.60
9350	48.46	0.52	0.62
9400	48.34	0.52	0.62
9500	48.13	0.53	0.63
9600	47.94	0.53	0.63
9700	47.67	0.54	0.63
9800	47.40	0.54	0.63
9900	47.05	0.55	0.63
10000	46.66	0.55	0.63
11200	37.67	0.65	0.63
11750	30.46	0.71	0.66
12300	20.84	0.79	0.72
13000	5.13	3.15	3.06
14200	1.03	22.17	19.77
14600	1.03	20.87	22.10
14800	1.09	17.80	18.71
15000	1.16	15.72	15.74
15200	1.21	14.75	14.10
15800	1.09	17.69	16.35
16000	1.05	20.43	18.92
16200	1.06	22.24	19.80
16400	1.09	21.70	18.27
16600	1.12	21.01	17.20
17000	1.14	23.30	20.47
17400	1.19	24.12	25.22
18580	3.00	7.49	6.93
19000	9.50	2.41	2.67
20000	28.13	0.87	0.83
20500	36.21	0.66	0.52
21000	45.43	0.61	0.44
22000	42.25	0.87	0.71
23000	32.57	1.29	1.16
24000	21.93	1.95	1.81
25000	16.94	1.75	1.90
26000	20.91	0.92	1.03
27000	21.09	0.89	1.00
28000	20.98	1.13	1.47
29000	27.10	0.93	1.37
30000	43.97	1.21	1.53
35000	19.45	1.93	1.40

FREQ. (MHz)	Group Delay (ns)
14200	0.52
14250	0.51
14300	0.51
14350	0.51
14400	0.51
14450	0.50
14500	0.50
14550	0.50
14600	0.50
14650	0.49
14700	0.49
14750	0.49
14800	0.49
14850	0.48
14900	0.48
14950	0.48
15000	0.47
15100	0.47
15150	0.47
15200	0.47
15250	0.46
15300	0.46
15350	0.46
15400	0.46
15450	0.46
15500	0.46
15550	0.46
15600	0.46
15650	0.46
15700	0.46
15750	0.47
15800	0.47
15850	0.47
15900	0.47
15950	0.47
16000	0.47
16100	0.47
16150	0.47
16200	0.47
16250	0.47
16300	0.47
16350	0.47
16400	0.47
16450	0.47
16700	0.47
16750	0.47
16800	0.47
16850	0.47
16900	0.48
16950	0.48
17000	0.48
17020	0.48
17040	0.48
17060	0.48
17080	0.48
17090	0.48
17100	0.48
17150	0.49
17200	0.49
17400	0.50

Typical Performance Curves

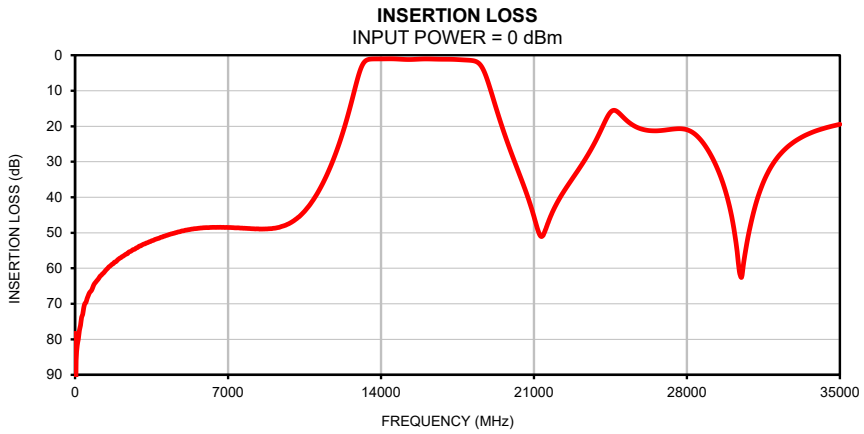

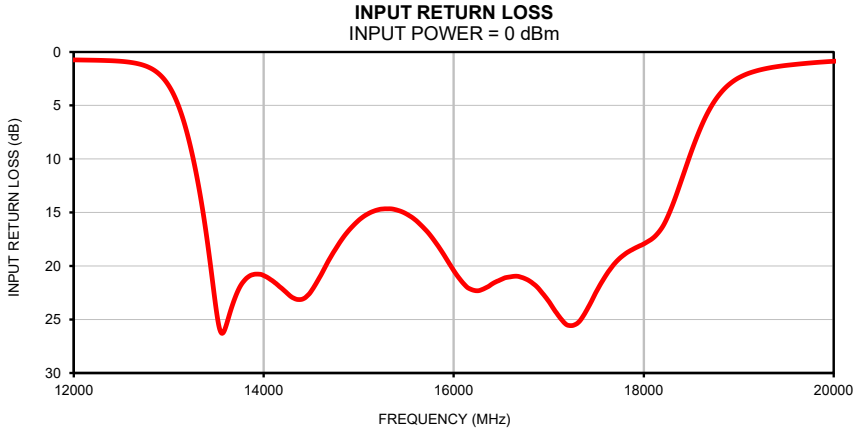

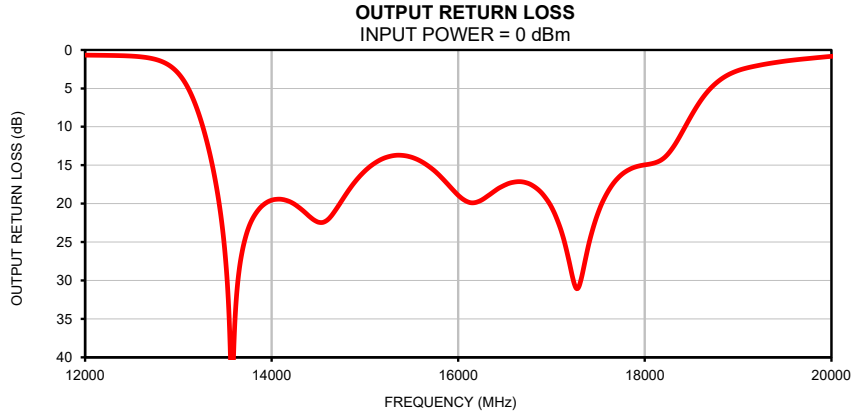

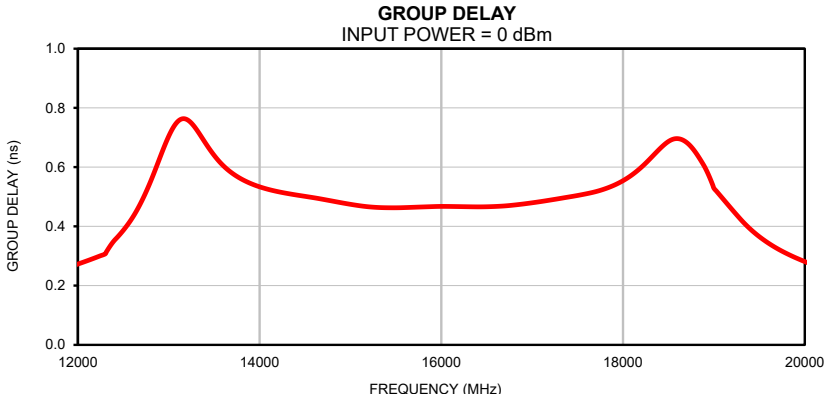

Case Style UK

Outline Dimensions

UK3042

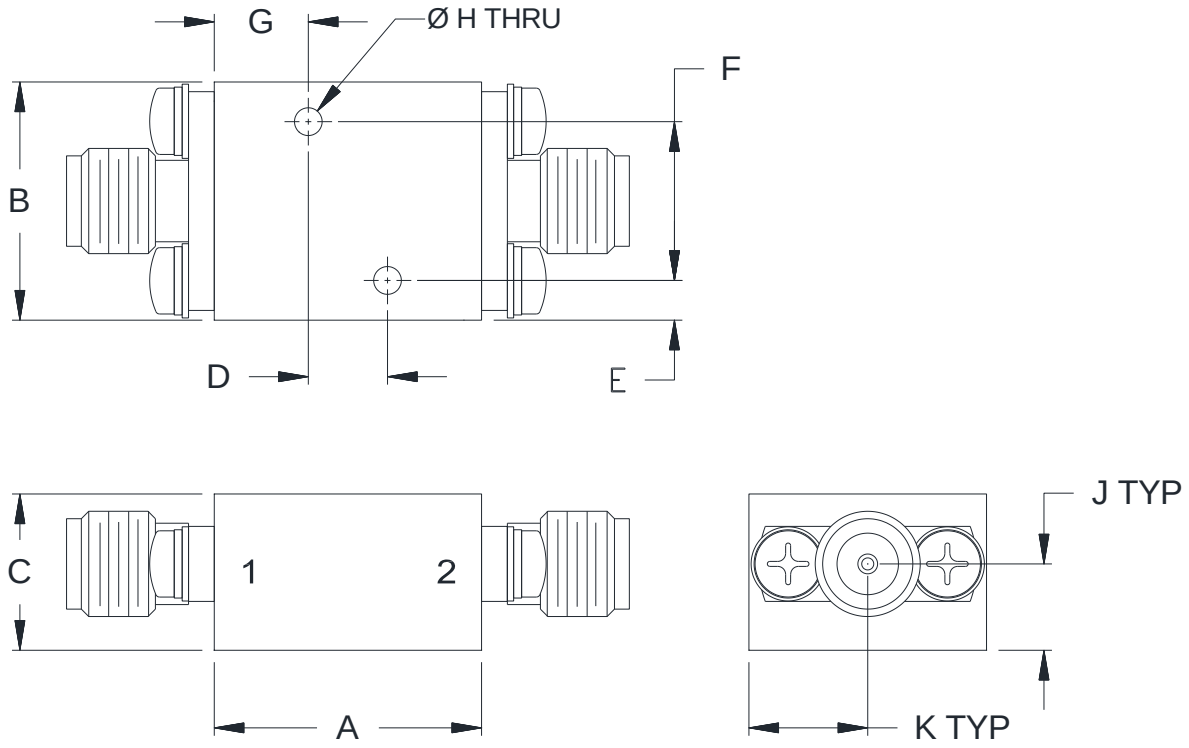

CASE#	A	B	C	D	E	F
UK3042	.68 (17.1)	.60 (15.2)	.39 (10.0)	.200 (5.08)	.10 (2.5)	.400 (10.16)

CASE#	G	H	J	K	WT.GRAMS
UK3042	.24 (6.0)	.070 (1.78)	.22 (5.5)	.30 (7.6)	24

Dimensions are in inches (mm). Tolerances: 2 Pl. ± .050; 3 Pl. ± .015

Notes:

1. Case material: Brass alloy.
2. Case Finish:
   a. Case & Cover of the units –Gold plating.
3. Refer to the individual model data sheet for the type of connectors available.

Mini-Circuits®
ISO 9001 ISO 14001 CERTIFIED
ALL NEW minicircuits.com
P.O. Box 350166, Brooklyn, New York 11235-0003 (718) 934-4500 Fax (718) 332-4661 For detailed performance specs & shopping online see Mini-Circuits web site
The Design Engineers Search Engine Provides ACTUAL Data Instantly From MINI-CIRCUITS At: www.minicircuits.com
RF/IF MICROWAVE COMPONENTS

This document and its contents are the property of Mini-Circuits

Mini-Circuits

Environmental Specifications ENV144

All Mini-Circuits products are manufactured under exacting quality assurance and control standards, and are capable of meeting published specifications after being subjected to any or all of the following physical and environmental test.

Specification	Test/Inspection Condition	Reference/Spec
Operating Temperature	-40° to 100° C Ambient Environment	Individual Model Data Sheet
Storage Temperature	-55° to 100° C Ambient Environment	Individual Model Data Sheet
Humidity	90 to 95% RH, 40°C, 96 hours Units may require bake-out after humidity to restore full performance.	MIL-STD-202. method 103. Condition B
Thermal Shock	-40°C to 100°C, 100 cycles	MIL-STD-202, Method 107, Condition A-3, except -40°C and +100°C

This document and its contents are the property of Mini-Circuits.