Evaluation Board and Circuit

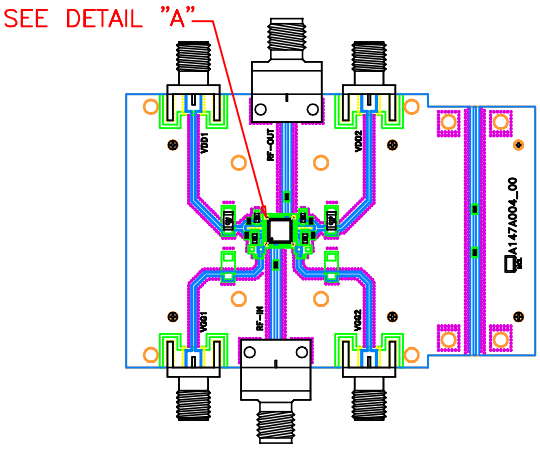

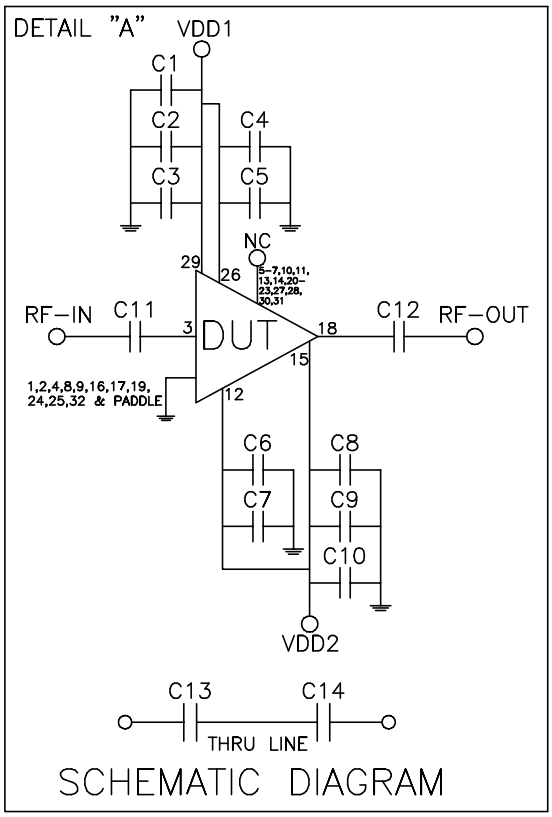

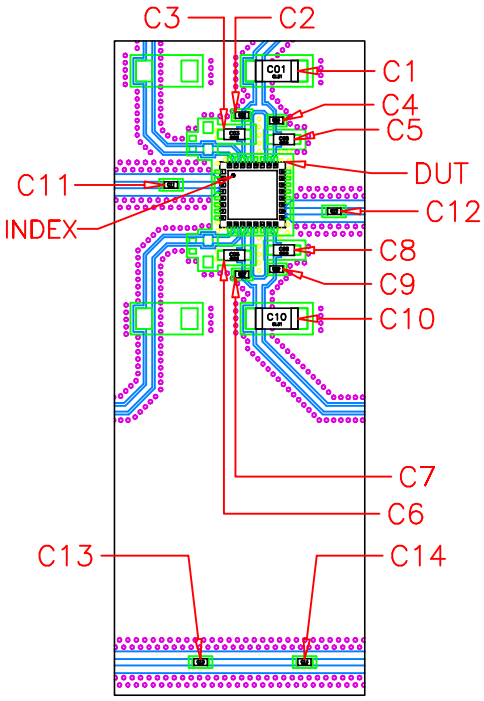

DETAIL "A" ROTATED
LOCATION OF
UNITS COMPONENTS
(SCALE 2:1)

Components	Size	Value	Part Numbers	Manufacturer
C3,C5,C6,C8	0603	100pF	B55-19-101G+	Murata
C2,C4,C7,C9	0402	0.01uF	B55-33-103K+	Murata
C1,C10	1206	10uF	B55-109-106K+	Samsung
C11,C12,C13,C14	0201	30pF	B55-104-300M+	DLI

Notes:

1. 2.4mm Female Connectors.
2. PCB Material: Roger RO4350B or equivalent, Dielectric constant=3.5, Thickness=0.010 inch

Mini-Circuits®

THIS DOCUMENT AND ITS CONTENTS ARE THE PROPERTY OF MINI-CIRCUITS.