X3 Frequency Multiplier

RMK-3-451+

50Ω Output 300 to 450 MHz

Generic photo used for illustration purposes only

CASE STYLE: TT1224

+RoHS Compliant
The +Suffix identifies RoHS Compliance. See our web site for RoHS Compliance methodologies and qualifications

Available Tape and Reel at no extra cost

Reel Size	Devices/Reel
7"	10, 20, 50, 100, 200
13"	500

Maximum Ratings

Operating Temperature	-40°C to 85°C
Storage Temperature	-55°C to 100°C
RF Input Power	20 dBm

Pin Connections

INPUT	1
OUTPUT	4
GROUND	2,3,5,6

Features

- broadband
- low conversion loss, 13.2 dB typ.
- high rejection F2, -52 dBc typ.; F4, -50 dBc typ.
- low cost
- aqueous washable

Applications

- synthesizers
- local oscillators
- satellite up and down converters

Outline Drawing

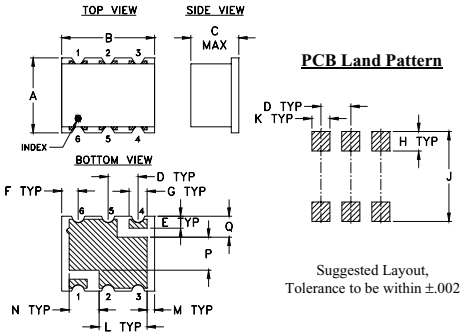

Outline Dimensions (inch / mm)

A	B	C	D	E	F	G	H
.25	.31	.16	.100	.040	.055	.060	.065
6.35	7.87	4.06	2.54	1.02	1.40	1.52	1.65

J	K	L	M	N	P	Q	wt.
.300	.060	.160	.025	.100	.110	.070	grams
7.62	1.52	4.06	0.64	2.54	2.79	1.78	0.16

Electrical Specifications

MULTIPLICATION FACTOR	FREQUENCY (MHz)		INPUT POWER (dBm)		CONVERSION LOSS (dB)		*HARMONIC OUTPUT (dBc)					
	F1 Input	F3 Output	Min.	Max.	Typ.	Max.	F1 Typ.	F1 Min.	F2 Typ.	F2 Min.	F4 Typ.	F4 Min.
3	100-150	300-450	12	17	13.2	16	4	-7	52	40	50	37

* Harmonics of input frequency below the power level of F3

Typical Performance Data

Input Frequency (MHz)	INPUT RF= 12 dBm Conversion Loss (dB) F3	Harmonic Output Below F3 (-dBc) F1	F2	F4	INPUT RF= 17 dBm Conversion Loss (dB) F3	Harmonic Output Below F3 (-dBc) F1	F2	F4
100.00	13.40	4.43	53.95	54.52	14.49	7.11	52.92	47.80
110.00	13.09	3.00	50.23	49.20	14.10	5.78	50.69	49.32
120.00	12.98	1.49	57.22	56.49	13.88	4.41	57.92	58.21
130.00	13.10	-0.05	62.62	71.51	13.80	3.03	67.71	70.53
140.00	13.22	-1.53	61.72	72.27	14.02	1.47	66.97	71.68
150.00	13.40	-3.09	61.54	71.44	14.37	-0.19	66.43	70.17

Demo Board MCL P/N: TB-393
Suggested PCB Layout (PL-258)

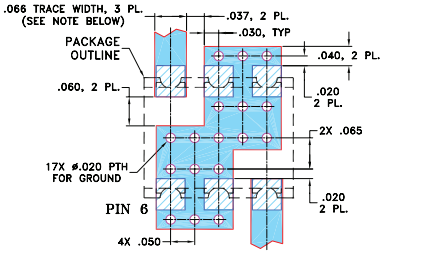

NOTES: 1. TRACE WIDTH IS SHOWN FOR ROGERS RO4350B WITH DIELECTRIC THICKNESS .030" ± .002"; COPPER: 1/2 OZ. EACH SIDE. FOR OTHER MATERIALS TRACE WIDTH MAY NEED TO BE MODIFIED.
2. BOTTOM SIDE OF THE PCB IS CONTINUOUS GROUND PLANE.

DENOTES PCB COPPER LAYOUT WITH SMOBC (SOLDER MASK OVER BARE COPPER)

DENOTES COPPER LAND PATTERN FREE OF SOLDER MASK

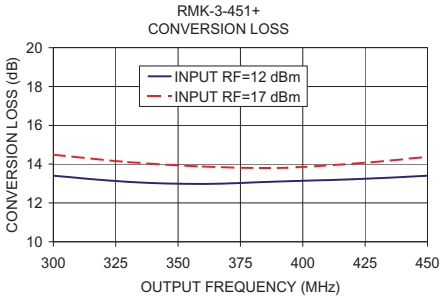

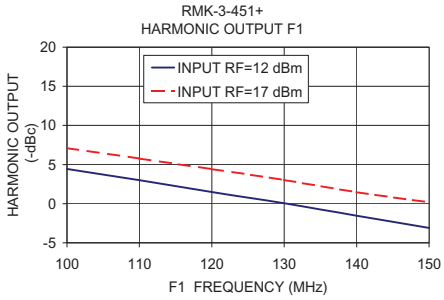

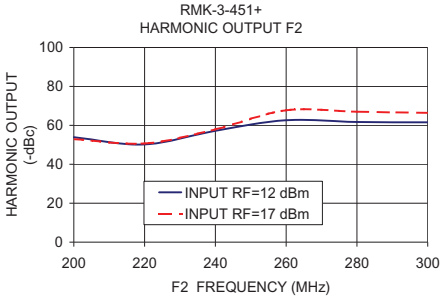

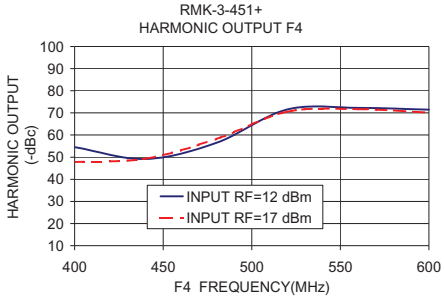

Notes
A. Performance and quality attributes and conditions not expressly stated in this specification document are intended to be excluded and do not form a part of this specification document.
B. Electrical specifications and performance data contained in this specification document are based on Mini-Circuit's applicable established test performance criteria and measurement instructions.
C. The parts covered by this specification document are subject to Mini-Circuits standard limited warranty and terms and conditions (collectively, "Standard Terms"); Purchasers of this part are entitled to the rights and benefits contained therein. For a full statement of the Standard Terms and the exclusive rights and remedies thereunder, please visit Mini-Circuits' website at www.minicircuits.com/MCLStore/terms.jsp

Mini-Circuits®
www.minicircuits.com P.O. Box 350166, Brooklyn, NY 11235-0003 (718) 934-4500 sales@minicircuits.com

REV. A
M151107
RMK-3-451+
ED-13291/1
DJ/CP
200813

Frequency Multiplier (Tripler) RMK-3-451+

Typical Performance Data

Test Conditions: RF Input Power = 12 dBm @ +25°C

FREQUENCY (MHz)				CONVERSION LOSS (dB)	HARMONIC OUTPUT* (-dBc)		
X1 OUTPUT	X2 OUTPUT	X3 OUTPUT	X4 OUTPUT	X3 OUTPUT	X1 OUTPUT	X2 OUTPUT	X4 OUTPUT
100.0	200.0	300.0	400.0	13.84	3.43	78.59	75.89
102.0	204.0	306.0	408.0	13.86	3.14	80.93	77.50
104.0	208.0	312.0	416.0	14.01	2.67	83.31	78.73
106.0	212.0	318.0	424.0	14.24	2.13	85.52	79.58
108.0	216.0	324.0	432.0	14.48	1.60	86.74	80.05
110.0	220.0	330.0	440.0	14.68	1.07	84.81	80.55
112.0	224.0	336.0	448.0	14.73	0.68	82.88	80.70
114.0	228.0	342.0	456.0	14.58	0.48	79.96	80.01
116.0	232.0	348.0	464.0	14.35	0.34	77.86	79.32
118.0	236.0	354.0	472.0	14.10	0.19	76.11	78.94
120.0	240.0	360.0	480.0	13.80	0.16	74.89	78.64
122.0	244.0	366.0	488.0	13.60	-0.07	73.99	77.97
124.0	248.0	372.0	496.0	13.42	-0.24	73.34	77.51
126.0	252.0	378.0	504.0	13.27	-0.42	72.97	77.45
128.0	256.0	384.0	512.0	13.15	-0.64	72.64	77.24
130.0	260.0	390.0	520.0	13.12	-0.89	72.19	77.14
132.0	264.0	396.0	528.0	13.17	-1.21	72.05	77.33
134.0	268.0	402.0	536.0	13.28	-1.58	71.69	77.81
136.0	272.0	408.0	544.0	13.43	-1.97	71.37	78.07
138.0	276.0	414.0	552.0	13.57	-2.42	71.15	78.51
140.0	280.0	420.0	560.0	13.59	-2.68	71.29	79.02
142.0	284.0	426.0	568.0	13.60	-3.00	71.27	78.53
144.0	288.0	432.0	576.0	13.57	-3.27	71.37	78.14
146.0	292.0	438.0	584.0	13.50	-3.45	71.60	77.56
148.0	296.0	444.0	592.0	13.41	-3.61	72.05	77.02
150.0	300.0	450.0	600.0	13.32	-3.80	72.43	76.46

* Harmonic Output below power level of X3 Output.

Typical Performance Data

Test Conditions: RF Input Power = 12 dBm @ -40°C

FREQUENCY (MHz)				CONVERSION LOSS (dB)	HARMONIC OUTPUT* (-dBc)		
X1 OUTPUT	X2 OUTPUT	X3 OUTPUT	X4 OUTPUT	X3 OUTPUT	X1 OUTPUT	X2 OUTPUT	X4 OUTPUT
100.0	200.0	300.0	400.0	14.11	2.69	77.94	74.69
102.0	204.0	306.0	408.0	14.18	2.34	80.22	75.78
104.0	208.0	312.0	416.0	14.46	1.76	82.55	77.23
106.0	212.0	318.0	424.0	14.84	1.08	84.56	78.33
108.0	216.0	324.0	432.0	15.22	0.42	85.00	79.23
110.0	220.0	330.0	440.0	15.54	-0.21	82.35	79.68
112.0	224.0	336.0	448.0	15.59	-0.61	80.33	79.80
114.0	228.0	342.0	456.0	15.33	-0.72	78.19	79.38
116.0	232.0	348.0	464.0	14.90	-0.68	76.76	78.78
118.0	236.0	354.0	472.0	14.45	-0.66	75.22	78.37
120.0	240.0	360.0	480.0	13.94	-0.49	74.56	77.71
122.0	244.0	366.0	488.0	13.61	-0.60	73.65	77.54
124.0	248.0	372.0	496.0	13.31	-0.67	73.08	77.12
126.0	252.0	378.0	504.0	13.07	-0.78	72.80	76.77
128.0	256.0	384.0	512.0	12.93	-0.97	72.40	76.60
130.0	260.0	390.0	520.0	12.91	-1.24	72.17	76.66
132.0	264.0	396.0	528.0	13.01	-1.60	71.86	76.81
134.0	268.0	402.0	536.0	13.23	-2.06	71.35	76.93
136.0	272.0	408.0	544.0	13.46	-2.53	71.03	77.57
138.0	276.0	414.0	552.0	13.65	-3.02	70.85	77.87
140.0	280.0	420.0	560.0	13.61	-3.23	70.93	78.08
142.0	284.0	426.0	568.0	13.54	-3.49	71.07	77.76
144.0	288.0	432.0	576.0	13.44	-3.69	71.26	77.14
146.0	292.0	438.0	584.0	13.35	-3.86	71.65	76.66
148.0	296.0	444.0	592.0	13.35	-4.09	71.89	76.21
150.0	300.0	450.0	600.0	13.40	-4.39	72.27	75.62

* Harmonic Output below power level of X3 Output.

Typical Performance Data

Test Conditions: RF Input Power = 12 dBm @ +85°C

FREQUENCY (MHz)				CONVERSION LOSS (dB)	HARMONIC OUTPUT* (-dBc)		
X1 OUTPUT	X2 OUTPUT	X3 OUTPUT	X4 OUTPUT	X3 OUTPUT	X1 OUTPUT	X2 OUTPUT	X4 OUTPUT
100.0	200.0	300.0	400.0	13.80	4.07	80.64	77.76
102.0	204.0	306.0	408.0	13.76	3.81	82.64	79.34
104.0	208.0	312.0	416.0	13.81	3.43	85.13	80.69
106.0	212.0	318.0	424.0	13.92	3.01	87.74	81.16
108.0	216.0	324.0	432.0	14.03	2.58	88.44	81.25
110.0	220.0	330.0	440.0	14.16	2.13	85.70	81.31
112.0	224.0	336.0	448.0	14.20	1.76	83.40	81.04
114.0	228.0	342.0	456.0	14.15	1.46	80.53	80.20
116.0	232.0	348.0	464.0	14.07	1.19	78.04	79.23
118.0	236.0	354.0	472.0	13.98	0.91	75.95	78.71
120.0	240.0	360.0	480.0	13.86	0.73	74.76	78.15
122.0	244.0	366.0	488.0	13.78	0.41	73.76	77.57
124.0	248.0	372.0	496.0	13.71	0.14	73.10	77.48
126.0	252.0	378.0	504.0	13.62	-0.10	72.72	77.30
128.0	256.0	384.0	512.0	13.54	-0.35	72.30	77.13
130.0	260.0	390.0	520.0	13.49	-0.59	71.97	77.07
132.0	264.0	396.0	528.0	13.48	-0.86	71.85	77.36
134.0	268.0	402.0	536.0	13.49	-1.15	71.63	77.45
136.0	272.0	408.0	544.0	13.56	-1.47	71.36	78.16
138.0	276.0	414.0	552.0	13.66	-1.89	71.15	78.37
140.0	280.0	420.0	560.0	13.73	-2.19	71.22	78.84
142.0	284.0	426.0	568.0	13.82	-2.57	71.15	78.58
144.0	288.0	432.0	576.0	13.85	-2.89	71.25	78.27
146.0	292.0	438.0	584.0	13.79	-3.08	71.39	77.67
148.0	296.0	444.0	592.0	13.64	-3.20	71.83	77.07
150.0	300.0	450.0	600.0	13.43	-3.30	72.23	76.53

* Harmonic Output below power level of X3 Output.

Typical Performance Data

Test Conditions: RF Input Power = 17 dBm @ +25°C

FREQUENCY (MHz)				CONVERSION LOSS (dB)	HARMONIC OUTPUT* (-dBc)		
X1 OUTPUT	X2 OUTPUT	X3 OUTPUT	X4 OUTPUT	X3 OUTPUT	X1 OUTPUT	X2 OUTPUT	X4 OUTPUT
100.0	200.0	300.0	400.0	14.03	7.03	78.15	73.97
102.0	204.0	306.0	408.0	13.82	6.85	77.23	73.64
104.0	208.0	312.0	416.0	13.61	6.65	76.35	73.72
106.0	212.0	318.0	424.0	13.39	6.45	75.85	74.12
108.0	216.0	324.0	432.0	13.17	6.26	75.39	74.87
110.0	220.0	330.0	440.0	13.03	6.01	74.88	75.33
112.0	224.0	336.0	448.0	13.04	5.70	74.67	76.78
114.0	228.0	342.0	456.0	13.20	5.27	74.39	77.85
116.0	232.0	348.0	464.0	13.45	4.78	74.32	78.82
118.0	236.0	354.0	472.0	13.72	4.26	74.18	79.55
120.0	240.0	360.0	480.0	14.01	3.79	73.33	80.53
122.0	244.0	366.0	488.0	14.22	3.25	72.59	79.56
124.0	248.0	372.0	496.0	14.42	2.78	72.33	78.70
126.0	252.0	378.0	504.0	14.53	2.38	72.20	78.64
128.0	256.0	384.0	512.0	14.57	2.05	71.90	78.88
130.0	260.0	390.0	520.0	14.50	1.80	71.45	79.01
132.0	264.0	396.0	528.0	14.33	1.65	71.00	79.42
134.0	268.0	402.0	536.0	14.05	1.57	70.37	79.26
136.0	272.0	408.0	544.0	13.80	1.45	69.79	79.45
138.0	276.0	414.0	552.0	13.69	1.19	69.41	79.52
140.0	280.0	420.0	560.0	13.88	0.81	69.18	78.99
142.0	284.0	426.0	568.0	14.22	0.26	69.18	77.83
144.0	288.0	432.0	576.0	14.59	-0.31	69.04	76.56
146.0	292.0	438.0	584.0	14.87	-0.82	69.91	76.97
148.0	296.0	444.0	592.0	14.31	-0.63	69.17	77.47
150.0	300.0	450.0	600.0	13.56	-0.39	68.14	77.78

* Harmonic Output below power level of X3 Output.

Typical Performance Data

Test Conditions: RF Input Power = 17 dBm @ -40°C

FREQUENCY (MHz)				CONVERSION LOSS (dB)	HARMONIC OUTPUT* (-dBc)		
X1 OUTPUT	X2 OUTPUT	X3 OUTPUT	X4 OUTPUT	X3 OUTPUT	X1 OUTPUT	X2 OUTPUT	X4 OUTPUT
100.0	200.0	300.0	400.0	13.44	7.14	77.16	72.47
102.0	204.0	306.0	408.0	13.24	6.96	76.15	72.33
104.0	208.0	312.0	416.0	13.04	6.76	75.59	72.42
106.0	212.0	318.0	424.0	12.84	6.57	75.05	72.78
108.0	216.0	324.0	432.0	12.62	6.39	74.74	73.47
110.0	220.0	330.0	440.0	12.50	6.14	74.27	73.75
112.0	224.0	336.0	448.0	12.50	5.82	74.27	74.94
114.0	228.0	342.0	456.0	12.68	5.37	73.95	75.73
116.0	232.0	348.0	464.0	12.93	4.84	73.97	76.34
118.0	236.0	354.0	472.0	13.20	4.29	73.80	76.82
120.0	240.0	360.0	480.0	13.47	3.82	73.37	77.26
122.0	244.0	366.0	488.0	13.68	3.26	72.90	77.16
124.0	248.0	372.0	496.0	13.86	2.80	72.55	76.91
126.0	252.0	378.0	504.0	13.96	2.40	72.33	76.82
128.0	256.0	384.0	512.0	13.98	2.08	71.95	76.93
130.0	260.0	390.0	520.0	13.91	1.84	71.54	77.20
132.0	264.0	396.0	528.0	13.74	1.69	70.97	77.43
134.0	268.0	402.0	536.0	13.47	1.62	70.34	77.33
136.0	272.0	408.0	544.0	13.22	1.52	69.80	77.62
138.0	276.0	414.0	552.0	13.11	1.26	69.35	77.56
140.0	280.0	420.0	560.0	13.30	0.87	69.15	77.13
142.0	284.0	426.0	568.0	13.66	0.28	69.11	76.01
144.0	288.0	432.0	576.0	14.05	-0.31	69.11	74.94
146.0	292.0	438.0	584.0	14.27	-0.77	69.83	75.30
148.0	296.0	444.0	592.0	13.73	-0.58	69.11	75.73
150.0	300.0	450.0	600.0	12.93	-0.25	68.11	75.94

* Harmonic Output below power level of X3 Output.

Typical Performance Data

Test Conditions: RF Input Power = 17 dBm @ +85°C

FREQUENCY (MHz)				CONVERSION LOSS (dB)	HARMONIC OUTPUT* (-dBc)		
X1 OUTPUT	X2 OUTPUT	X3 OUTPUT	X4 OUTPUT	X3 OUTPUT	X1 OUTPUT	X2 OUTPUT	X4 OUTPUT
100.0	200.0	300.0	400.0	14.71	6.83	79.18	74.82
102.0	204.0	306.0	408.0	14.50	6.63	77.90	74.53
104.0	208.0	312.0	416.0	14.28	6.42	76.92	74.53
106.0	212.0	318.0	424.0	14.06	6.20	76.10	74.93
108.0	216.0	324.0	432.0	13.83	5.99	75.54	75.67
110.0	220.0	330.0	440.0	13.69	5.73	74.95	76.18
112.0	224.0	336.0	448.0	13.69	5.45	74.60	77.79
114.0	228.0	342.0	456.0	13.86	5.06	74.29	78.99
116.0	232.0	348.0	464.0	14.10	4.62	74.14	80.00
118.0	236.0	354.0	472.0	14.37	4.14	73.99	80.62
120.0	240.0	360.0	480.0	14.66	3.70	73.20	81.28
122.0	244.0	366.0	488.0	14.87	3.19	72.67	79.94
124.0	248.0	372.0	496.0	15.08	2.72	72.57	79.75
126.0	252.0	378.0	504.0	15.20	2.32	72.43	79.80
128.0	256.0	384.0	512.0	15.25	1.97	72.09	80.19
130.0	260.0	390.0	520.0	15.19	1.71	71.78	80.31
132.0	264.0	396.0	528.0	15.02	1.53	71.15	80.89
134.0	268.0	402.0	536.0	14.74	1.43	70.55	81.02
136.0	272.0	408.0	544.0	14.50	1.27	69.90	81.14
138.0	276.0	414.0	552.0	14.38	1.00	69.44	81.34
140.0	280.0	420.0	560.0	14.57	0.63	69.34	80.63
142.0	284.0	426.0	568.0	14.91	0.12	69.31	79.54
144.0	288.0	432.0	576.0	15.25	-0.38	69.19	78.20
146.0	292.0	438.0	584.0	15.59	-0.95	69.98	78.54
148.0	296.0	444.0	592.0	15.01	-0.76	69.27	79.45
150.0	300.0	450.0	600.0	14.30	-0.63	68.17	79.45

* Harmonic Output below power level of X3 Output.

Frequency Multiplier (Tripler) RMK-3-451+

Typical Performance Curves

Conversion Loss X3 Output @ RF IN=12dBm

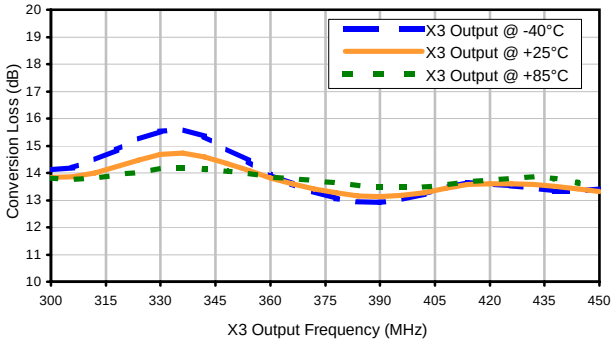

Harmonic X1 Output @ RF IN=12dBm

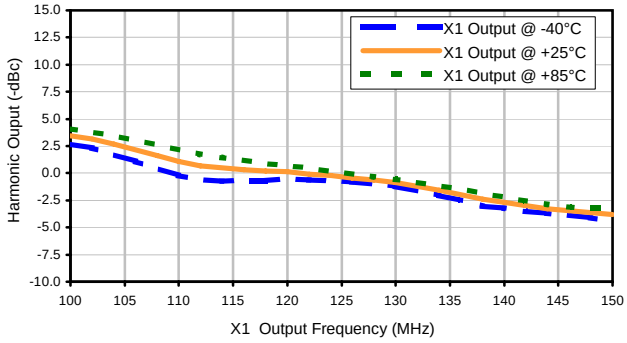

Harmonic X2 Output @ RF IN=12dBm

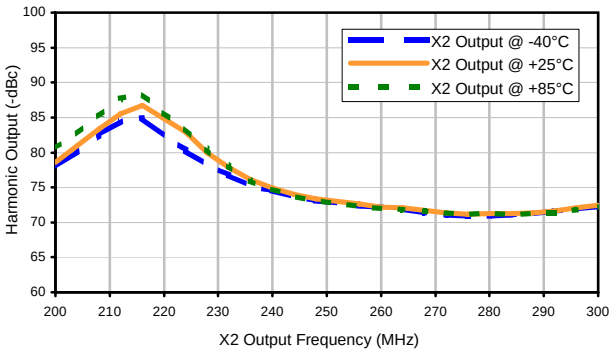

Harmonic X4 Output @ RF IN=12dBm

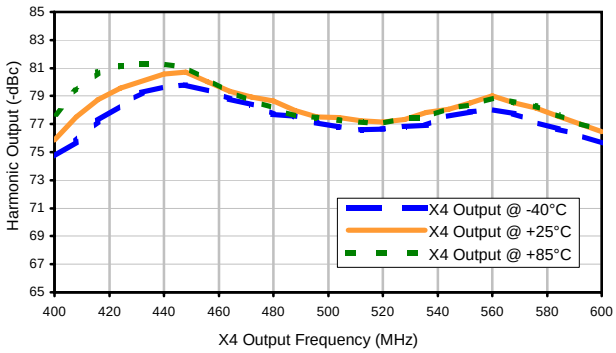

Typical Performance Curves

Conversion Loss X3 Output @ RF IN=17dBm

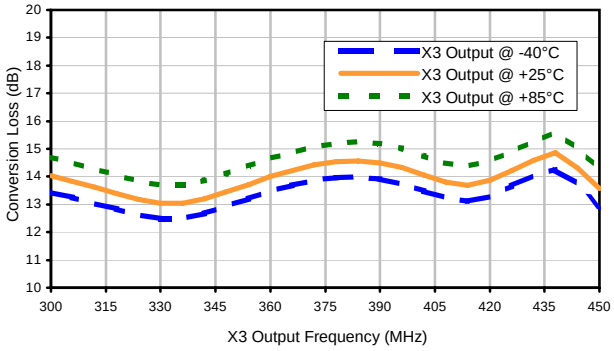

Harmonic X1 Output @ RF IN=17dBm

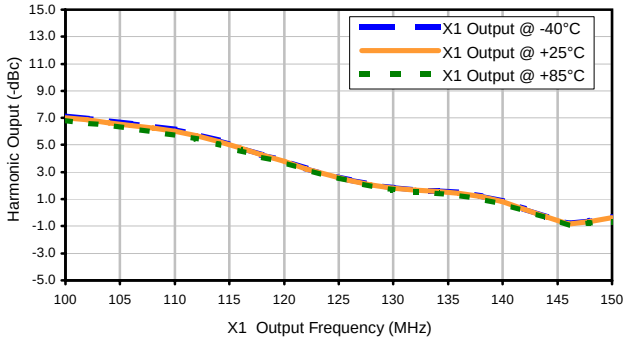

Harmonic X2 Output @ RF IN=17dBm

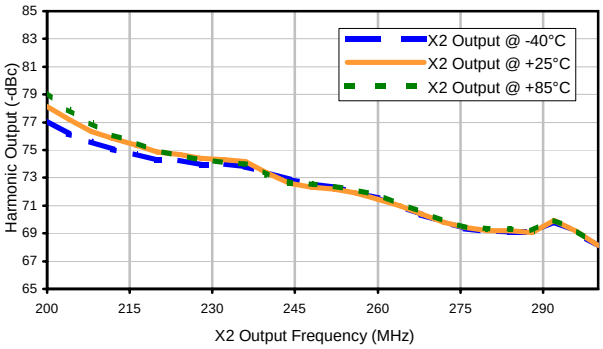

Harmonic X4 Output @ RF IN=17dBm

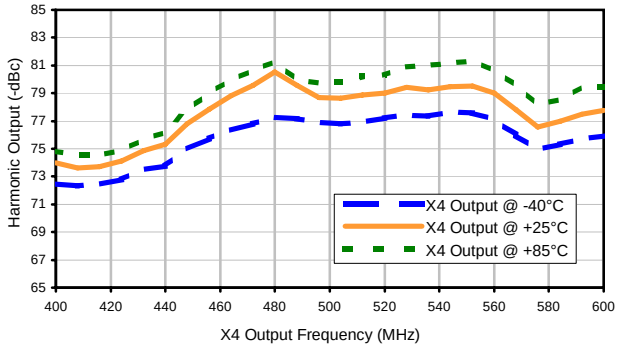

Case Style TT

TT1224

Outline Dimensions

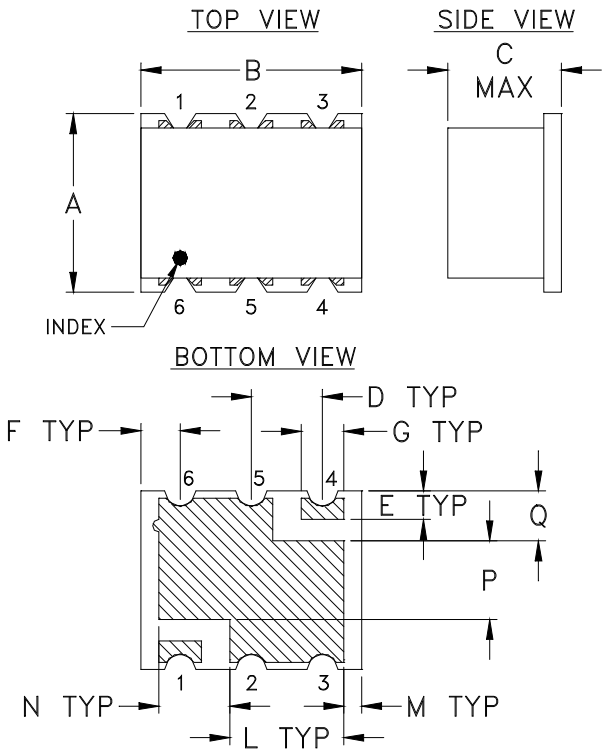

PCB Land Pattern

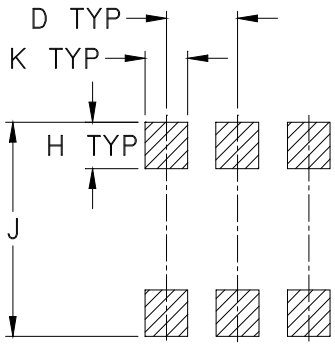

Suggested Layout,
Tolerance to be within ±.002

CASE #	A	B	C	D	E	F	G	H	J	K	L
TT1224	.25 (6.35)	.31 (7.87)	.16 (4.06)	.100 (2.54)	.040 (1.02)	.055 (1.40)	.060 (1.52)	.065 (1.65)	.300 (7.62)	.060 (1.52)	.160 (4.06)

CASE #	M	N	P	Q	WT. GRAM
TT1224	.025 (.64)	.100 (2.54)	.110 (2.79)	.070 (1.78)	.16

Dimensions are in inches (mm). Tolerances: 2Pl. ± .01; 3 Pl. ± .005

Notes:

1. Case material: Plastic.
2. Termination: 2-10 µ inch (.05-.25 microns) Gold over 100-300 µ inch (2.54-7.62 microns) Nickel plate

This document and its contents are the property of Mini-Circuits.

Tape & Reel Packaging TR-F2

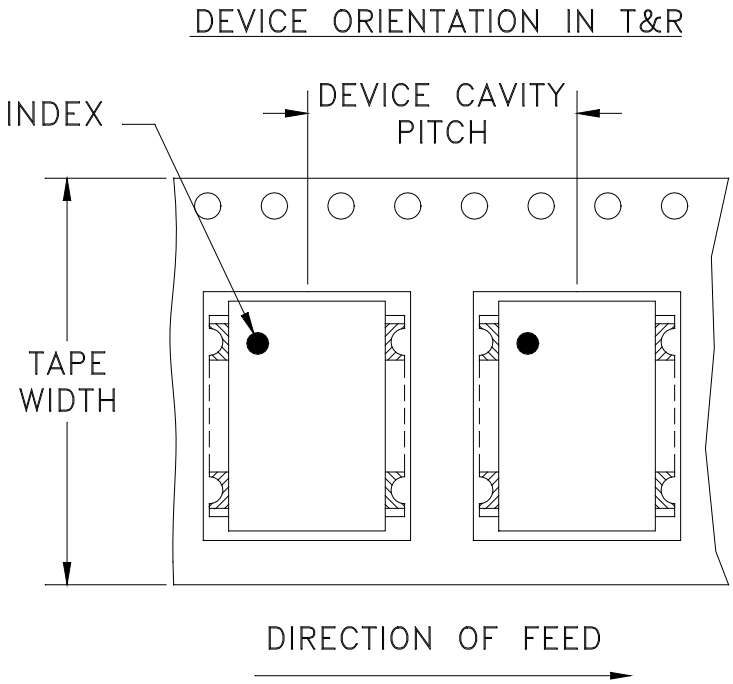

Tape Width, mm	Device Cavity Pitch, mm	Reel Size, inches	Devices per Reel See note
16	12	7	10
			20
			50
			100
			200
		13	500
			1000

Mini-Circuits carrier tape materials provide protection from ESD (Electro-Static Discharge) during handling and transportation. Tapes are static dissipative and comply with industry standards EIA-481/EIA-541.

Go to: www.minicircuits.com/pages/pdfs/tape.pdf

Mini-Circuits®
INTERNET http://www.minicircuits.com
P.O. Box 350166, Brooklyn, New York 11235-0003 (718) 934-4500 Fax (718) 332-4661
Distribution Centers NORTH AMERICA 800-654-7949 • 417-335-5935 • Fax 417-335-5945 • EUROPE 44-1252-832600 • Fax 44-1252-837010
Mini-Circuits ISO 9001 & ISO 14001 Certified

This document and its contents are the property of Mini-Circuits.

THIRD ANGLE PROJECTION

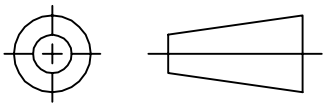

REVISIONS					
REV	ECN No.	DESCRIPTION	DATE	DR	AUTH
OR	M108897	NEW RELEASE	01/04/07	AV	DJ

SUGGESTED MOUNTING CONFIGURATION FOR TT1224 CASE STYLE "rv" PIN CONNECTION

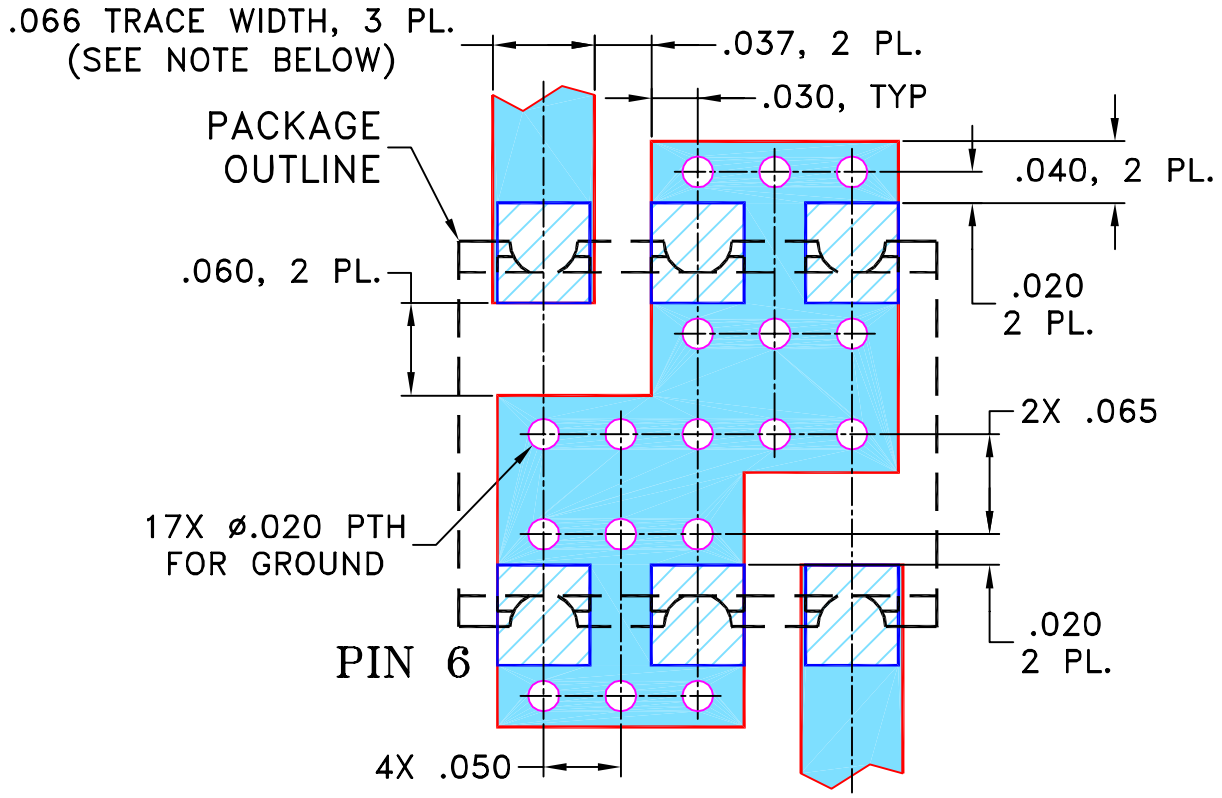

NOTES: 1. TRACE WIDTH IS SHOWN FOR ROGERS RO4350B WITH DIELECTRIC THICKNESS .030" ± .002"; COPPER: 1/2 OZ. EACH SIDE. FOR OTHER MATERIALS TRACE WIDTH MAY NEED TO BE MODIFIED.

2. BOTTOM SIDE OF THE PCB IS CONTINUOUS GROUND PLANE.

DENOTES PCB COPPER LAYOUT WITH SMOBC (SOLDER MASK OVER BARE COPPER)

DENOTES COPPER LAND PATTERN FREE OF SOLDER MASK

UNLESS OTHERWISE SPECIFIED		INITIALS	DATE
DIMENSIONS ARE IN INCHES	DRAWN	AV	12/14/06
TOLERANCES ON:	CHECKED	IL	01/04/07
2 PL DECIMALS ±	APPROVED	DJ	01/04/07
3 PL DECIMALS ± .005			
ANGLES ±			
FRACTIONS ±			

Mini-Circuits®

THIS DOCUMENT AND ITS CONTENTS ARE THE PROPERTY OF MINI-CIRCUITS. EXCEPT FOR USE EXPRESSLY GRANTED, IN WRITING, TO ITS VENDORS, VENDEE AND THE UNITED STATES GOVERNMENT, MINI-CIRCUITS RESERVES ALL PROPRIETARY DESIGN, USE , MANUFACTURING AND REPRODUCTION RIGHTS THERETO. THESE CONTENTS SHALL NOT BE USED, DUPLICATED OR DISCLOSED TO ANY OUTSIDE PARTY, IN WHOLE OR IN PART, WITHOUT WRITTEN PERMISSION OF MINI-CIRCUITS.

ASHEETA1.DWG REV:A DATE:01/12/95

Mini-Circuits® 13 Neptune Avenue Brooklyn NY 11235

PL, rv, TT1224, RMK-3-662+, TB-393

SIZE	CODE IDENT	DRAWING NO:	REV:
A	15542	98-PL-258	OR

FILE:	SCALE:	SHEET:
98PL258	8:1	1 OF 1

Evaluation Board and Circuit

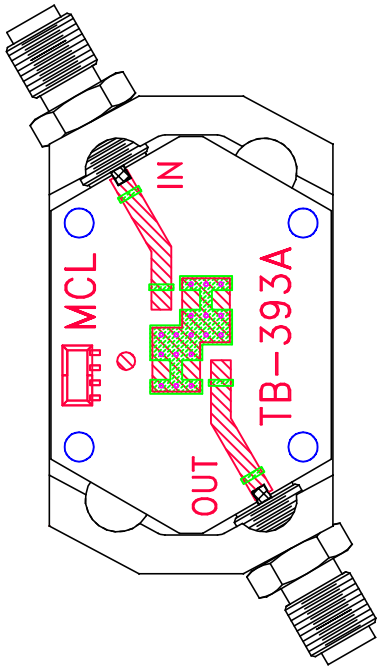

TB-393

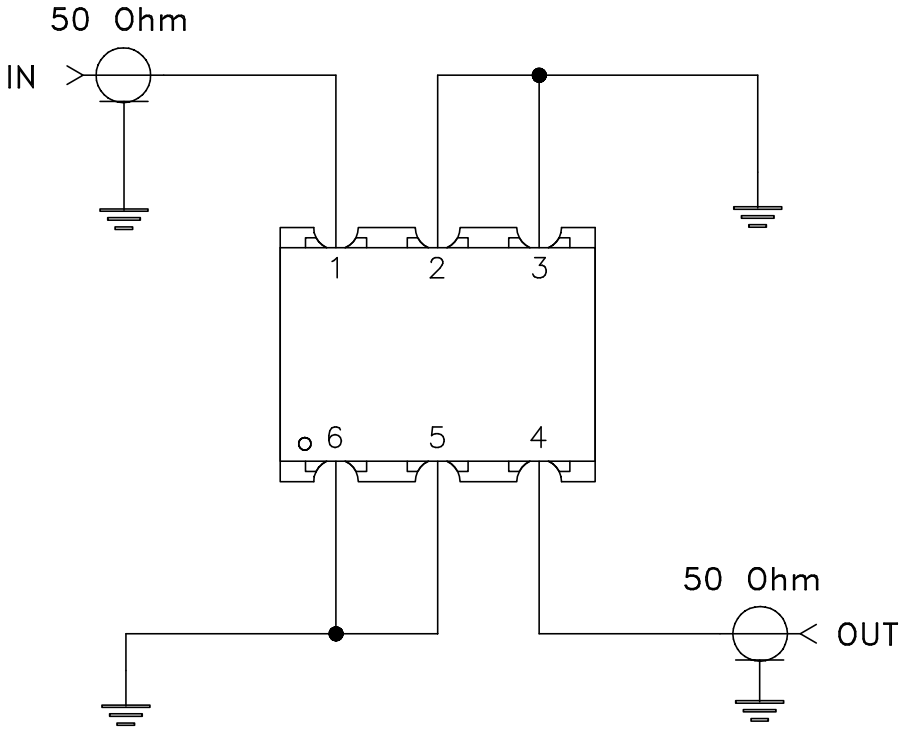

Schematic Diagram

Notes:

1. SMA Female connectors.
2. PCB Material: Rogers RO4350 or equivalent, Dielectric Constant=3.5, Thickness=.030 inch.

Mini-Circuits®

THIS DOCUMENT AND ITS CONTENTS ARE THE PROPERTY OF MINI-CIRCUITS.

Mini-Circuits

Environmental Specifications ENV02T1

All Mini-Circuits products are manufactured under exacting quality assurance and control standards, and are capable of meeting published specifications after being subjected to any or all of the following physical and environmental test.

Specification	Test/Inspection Condition	Reference/Spec
Operating Temperature	-40° to 85°C Ambient Environment	Individual Model Data Sheet
Storage Temperature	-55° to 100° C Ambient Environment	Individual Model Data Sheet
Humidity	90 to 95% RH, 240 hours, 50°C	MIL-STD-202, Method 103, Condition A, Except 50°C and end-point electrical test done within 12 hours
Thermal Shock	-55° to 100°C, 100 cycles	MIL-STD-202, Method 107, Condition A-3, except +100°C
Solder Reflow Heat	Sn-Pb Eutetic Process: 225°C peak Pb-Free Process 245° - 250°C peak	J-STD-020, Table 4-1, 4-2 and 5-2, Figure 5-1
Solderability	10X Magnification	J-STD-002, 95% Coverage
Vibration (High Frequency)	20g peak, 10-2000 Hz, 12 times in each of three perpendicular directions (total 36)	MIL-STD-202, Method 204, Condition D
Mechanical Shock	50g, 11 ms, 1/2-sine, 18 shocks: 3 each direction, each of 3 axes	MIL-STD-202, Method 213, Condition A
Marking Resistance to Solvents	Isopropyl alcohol + mineral spirits at 25°C; terpene defluxer at 25°C; distilled water + proylene glycol monomethyl ether + monoethanolamine at 63°C to 70°C	MIL-STD-202, Method 215

This document and its contents are the property of Mini-Circuits.